nVent RAYCHEM

HWAT System

Installation and Operation Manual for Hot Water Temperature Maintenance Systems for Thermally Insulated Pipes

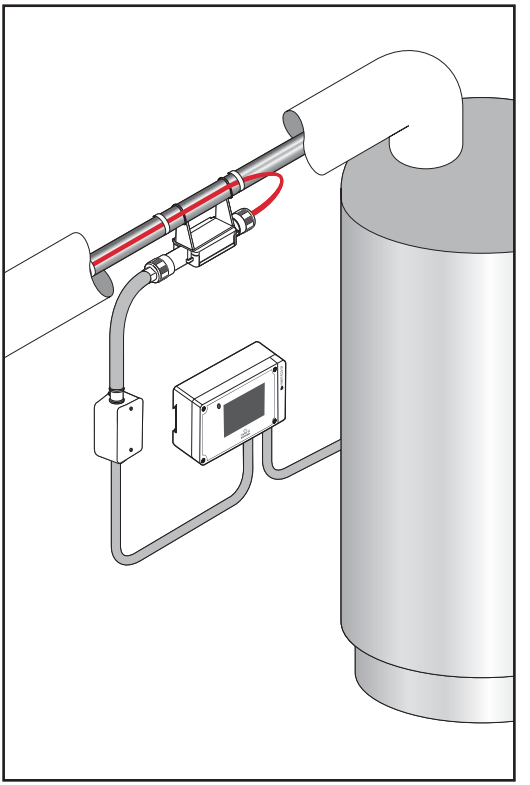

Important Safeguards and Warnings

⚠ WARNING: FIRE AND SHOCK HAZARD

nVent RAYCHEM HWAT systems must be installed correctly to ensure proper operation and to prevent shock and fire. Read these important warnings and carefully follow all the installation instructions.

- To minimize the danger of fire from sustained electrical arcing if the heating cable is damaged or improperly installed, and to comply with nVent requirements, agency certifications, and national electrical codes, ground-fault equipment protection must be used on each heating cable branch circuit. Arcing may not be stopped by conventional circuit breakers.
- Approvals and performance are based on the use of nVent parts only. Do not substitute parts or use vinyl electrical tape.
- Bus wires will short if they contact each other. Keep bus wires separated.
- Connection kits and heating cable ends must be kept dry before and during installation.
- The black heating cable core is conductive and can short. They must be properly insulated and kept dry.
- Damaged bus wires can overheat or short. Do not break bus wire strands when preparing the cable for connection.
- Damaged heating cable can cause electrical arcing or fire. Do not use metal attachments such as pipe straps or tie wire. Use only nVent approved tapes and cable ties to secure the cable to the pipe.
- Do not attempt to repair or energize damaged cable. Remove damaged cable at once and replace with a new length using the nVent RAYCHEM RayClic-S or FTC-HST-PLUS splice kit. Replace damaged connection kits.
- Use only fire-resistant insulation which is compatible with the application and the maximum exposure temperature of the system to be traced.

WARNING: Water temperature above 130°F (55°C) presents a significant risk of personal injury and/or death and requires that scald protection measures be implemented for safe use.

1 General Information 1

1.1 Use of the Manual 1
1.2 Safety Guidelines 2
1.3 Typical HWAT System 2
1.4 Electrical Codes 3
1.5 Approvals 3
1.6 Warranty 4
1.7 Trade Coordination 4
1.8 General Installation Notes 5
1.9 Tools Required 6

2 Heating Cable Verification and Selection 7

2.1 Heating Cable 7

3 Heating Cable Installation 8

3.1 Heating Cable Storage 8
3.2 Pre-Installation Checks 8
3.3 Installation 8

4 Heating Cable Components 14

4.1 General Connection Kit Information 14

5 Control and Monitoring 16

5.1 HWAT-ECO-GF and ACS-30 Controllers 16

6 Thermal Insulation 17

6.1 Insulating the System 17
6.2 Insulation Installation 17

7 Power Supply and Electrical Protection 20

7.1 Voltage Rating 20
7.2 Circuit Breaker Sizing 20
7.3 Electrical Loading 20
7.4 Ground-Fault Protection 21

8 Commissioning and Preventive Maintenance 22

8.1 Tests 22
8.2 Preventative Maintenance 24

9 Test Procedures 25

9.1 System Tests 25
9.2 Fault Location Tests 31
9.3 Cable and Connection Continuity Test 34

10 Troubleshooting Guide 36

1. GENERAL INFORMATION

1.1 Use of the Manual

This installation and operation manual is for nVent RAYCHEM Hot Water Temperature Maintenance (HWAT) systems installed on thermally insulated pipes only.

This manual details how to install and operate an HWAT system. The HWAT system includes the nVent RAYCHEM HWAT-P1 or HWAT-R2 heating cables, the nVent RAYCHEM RayClic, FTC-HST-PLUS, or HWT-P connection kits and the nVent RAYCHEM HWAT-ECO-GF or ACS-30 controllers. It is important to review this manual and the following documents with the installing contractor:

- HWAT System Catalog (H57538)
- HWAT System Design Guide (H57510)
- HWAT-ECO-GF Data Sheet (H60160)
- ACS-30 Mulitpoint Commercial Heat-tracing Control System Data Sheet (H58261)
- HWAT Heating Cable Data Sheet (H57512)
- RayClic Connection System Data Sheet (H57545)
- FTC & HWT Connection Kit Data Sheet (H58159)
- HWAT-ECO-GF Installation and Operation Manual (H60223)
- ACS-30 Programming Guide (H58692)

For additional information, contact:

nVent
7433 Harwin Drive
Houston, TX 77036
USA
Tel: +1.800.545.6258
Fax: +1.800.527.5703
thermal.info@nVent.com
nVent.com/RAYCHEM

Important: For the nVent warranty and agency approvals to apply, the instructions that are included in this manual and product packages must be followed.

1.2 Safety Guidelines

The safety and reliability of any heat-tracing system depends on the quality of the products selected, and on proper design, installation, and maintenance. Incorrect design, handling, installation, or maintenance of any of the system components can cause underheating or overheating of the pipe, or damage to the heating cable system, and may result in system failure, electric shock, or fire. The guidelines and instructions contained in this guide are important. Follow them carefully to minimize these risks and to ensure that the HWAT system performs reliably.

Pay special attention to the following:

Instructions marked **Important**

Warnings marked **WARNING**

1.3 Typical HWAT System

A typical HWAT system is shown is Figure 1. The heating cable is cut to length in the field and is attached to the pipe with glass tape.
A power connection kit connects the heating cable bus wires to power in a junction box. RayClic tees and splices accommodate pipe branches to connect two or three heating cables together. An end seal kit is used to terminate the end of the heating cable. A controller is used to set the maintain temperature and improve energy savings.

Important: A pipe temperature sensor must be used on the least used pipe with HWAT-P1 heating cable.

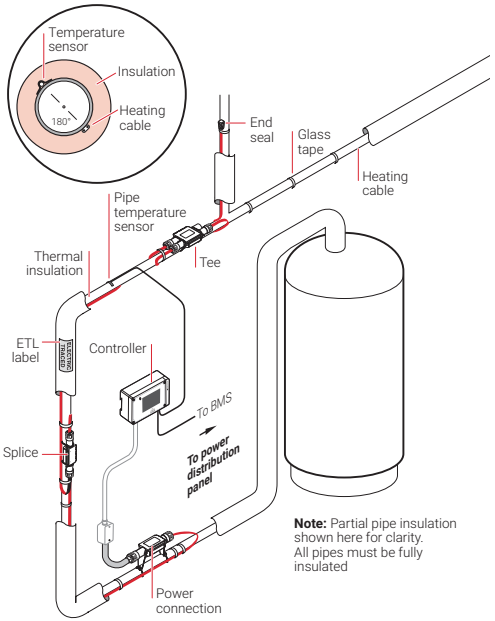

Figure 1: Typical HWAT heating cable system

1.4 Electrical Codes

Section 427 of the National Electrical Code (NEC), and Part 1, Section 62 of the Canadian Electrical Code (CEC), in particular, govern the installation of electrical heat-tracing systems used on hot water pipes. All installations must be in compliance with this and any other applicable national or local codes.

1.5 Approvals

HWAT-P1 and HWAT-R2 heating cables, RayClic, HWT-P, FTC-HST-PLUS connection kits and the HWAT-ECO-GF controller are c-UL-us Listed and the ACS-CRM and the ACS-CRMS controllers are c-CSA-us certified to US and Canadian standards for use in non-hazardous locations. Refer to the specific product data sheets for details.

1.6 Warranty

nVent standard limited warranty applies to all products.

An extension of the limited warranty period to ten (10) years from the date of installation is available if a properly completed on-line warranty form is completed within thirty (30) days from the date of installation. The extension is valid for the HWAT-P1 or HWAT-R2 heating cables and RayClic FTC-HST-PLUS or HWT-P connection kits and accessories, but **not** the HWAT-ECO-GF or ACS-30 controllers. You can access the complete warranty on **https://RAYCHEM.nVent.com/support/warranty-information**.

1.7 Trade Coordination

Installation of an HWAT system can involve or impact the work of numerous trades. Therefore, effective and early coordination between trades is a critical aspect of all HWAT system installations. The installation of the heating cable and connections must be properly scheduled, along with the scheduling of the risers and insulation installation.

This guide will assist the installer throughout the installation process and must be reviewed by all affected trades before installation of the HWAT system begins. In a fast-track job, the HWAT system must be considered a critical path item: the pipe, heating cable, insulation, and wallboard must all be installed in the proper order, since the heating cable cannot be installed later. If, for example, the walls go up before the heating cable commissioning tests have been completed, it may be necessary to remove the walls in order to repair a damaged or improperly installed system.

Ensuring that the installation of the HWAT system is included in the overall construction schedule will help ensure a successful and trouble-free installation.

1.8 General Installation Notes

Read and observe the instructions in this guide to insure that the HWAT system is installed successfully.

- Accidental damage to the system can be minimized during construction by installing thermal insulation on the pipe immediately after the pipe has been traced and the heating cable has been tested.
- Read all installation documentation to familiarize yourself with the system components.
- Read and follow all warnings and recommendations. All involved trades should review this entire guide and assess the recommendations applicable to their scope of work.
- All heat-traced pipes and equipment must be thermally insulated. Insulation is an essential part of the HWAT system. For an effective system, the fiberglass insulation must be a specific thickness for each specific pipe size as detailed in Table 2 on page 17.
- Do not install the HWAT system below the minimum installation temperature.
- The minimum installation temperature for HWAT heating cables is 0°F (–18°C)
- The minimum installation temperature for HWAT-ECO-GF is 40°F (5°C).
- Ensure that your water heater temperature is set at your desired pipe maintain temperature.
- Do not energize cable when it is coiled or on the reel.
- Never use metal tie wire or pipe straps to secure heating cables to pipes.

Important: Exceeding 185°F (85°C) for HWAT heating cables will decrease the power output of the cables over time.

1.9 Tools Required

For installing cable and connection kits:

- Utility knife
- Diagonal cutters
- Cable cutters
- Tape measure
- Screwdriver
- Heat gun or propane torch

For testing the heating cable:

- Megohmmeter 2500 Vdc
- Multimeter (voltage, resistance and capacitance)

2. HEATING CABLE VERIFICATION AND SELECTION

2.1 Heating Cable

The HWAT system includes HWAT-P1 or HWAT-R2 heating cable designed to maintain the piping at specific temperature settings with the use of the HWAT-ECO-GF or ACS-30 controllers. Figure 2 shows the construction of the heating cable.

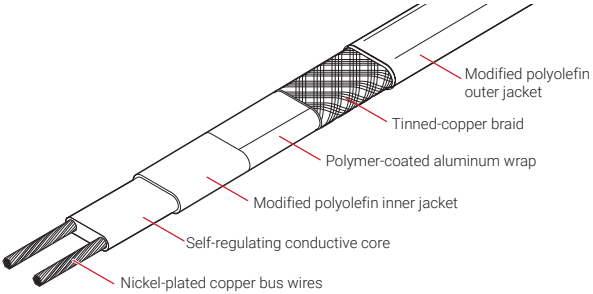

Figure 2: HWAT heating cable

Important: The minimum control setpoint for HWAT-P1 or HWAT-R2 is 105°F (40°C). The maximum control setpoint 130°F (54°C) for HWAT-P1 or 140°F (60°C) for HWAT-R2.

3. HEATING CABLE INSTALLATION

3.1 Heating Cable Storage

- Store the heating cable in a clean, dry location. Temperature range: 0°F (–18°C) to 140°F (60°C).
- Protect the heating cable from mechanical damage.

3.2 Pre-Installation Checks

Check materials received:

- Review the heating cable design and compare the list of materials to the catalog numbers of the heating cables and connection kits received to confirm that the proper materials are on site. The heating cable type is printed on its jacket.
- The HWAT system is limited to 120 V or 208–277 V service when using the HWAT-ECO-GF controller. When using the ACS-30 controller the voltage range is 208–277 V. Ensure that the service voltage available is correct.
- Inspect the heating cable and connection kits to ensure there is no in-transit damage.
- Verify that the heating cable jackets are not damaged by conducting the insulation resistance test (refer to Section 9) on each reel of cable. Do not power the heating cable when it's on the reel.

Check piping to be traced:

- Make sure all mechanical pipe testing (i.e. hydrostatic testing/purging) is complete and the system has been cleared by the client for tracing.
- Walk the system and plan the routing of the heating cable on the pipe.
- Inspect the piping and remove any burrs, rough surfaces or sharp edges.

3.3 Installation

- Pay out the heating cable, loosely stringing it along the pipe, making sure that the cable is always next to the pipe when crossing obstacles.
- Install HWAT heating cable in straight runs along the pipe. **Do not loop or use more than one run of heating cable. If alternate designs are required contact nVent for an approved project specific design. This will include specific instructions regarding heating cable application and insulation thicknesses which have been properly adjusted to meet the project needs.**

- If the cable is on the wrong side of an obstacle such as a crossing pipe or I-beam, you will need to reinstall it or cut and splice it.
- When installing the heating cable, the cable **must not** be compressed or pinched between two objects. Wall and floor penetrations and pipe hangers are particular areas of concern.

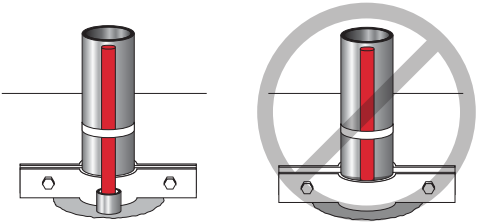

Figure 3: Protecting the heating cable in floor penetrations

- Run insulation through the pipe hanger ensuring that the pipe is not resting on the heater.

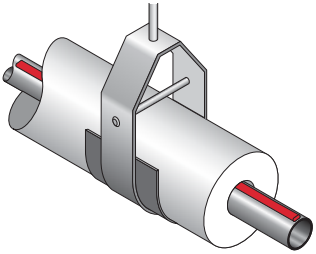

Figure 4: Pipe hanger with heating cable

- When making floor or wall penetrations, make sure the hole is large enough to accommodate the pipe and the thermal insulation. When sealing around pipes at floor penetrations, avoid damaging or cutting the heating cable, or pinching it between the pipe and the concrete.

- The heating cable must not be embedded directly in the sealing material; the pipe should have thermal insulation over it (if allowed by local codes) or the heating cable should be run through the penetration in a tube or conduit. If the conduit must be sealed, use a pliable fire-resistant material (STI Firestop, Dow Corning Fire Stop, 3M Fire Barrier, or T&B Flame-Safe) that can be removed if necessary.

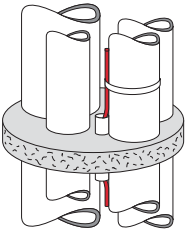

Figure 5: Multiple pipe floor penetration

- On vertical piping groups, run the heating cable along the inside of the pipe close to other pipes so it will not be damaged if the pipe hits the side of the floor penetration. Run the heating cable over the outside of the pipe support. Do not clamp the heating cable to the pipe with the pipe support.
- In high-rise construction it may be necessary to install the HWAT system 10 or 12 floors at a time to fit into the construction schedule. If so, the end of the heating cable should be sealed with a RayClic-E end seal and placed in an accessible location. This allows testing of one part of the heating cable at a time, and allows splicing it to another section when the system is complete.

Paying out the cable:

- Use a reel holder that pays out smoothly with little tension. If the heating cable snags, stop pulling.
- Keep the heating cable strung loosely but close to the pipe being traced to avoid interference with supports and equipment.
- Meter marks on the heating cable can be used to determine cable length.
- Protect all heating cable ends from moisture, contamination and mechanical damage.

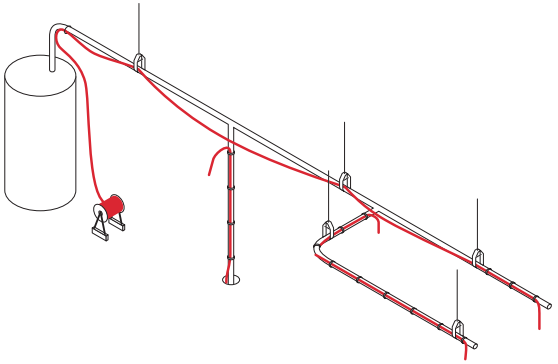

Figure 6: HWAT cable layout

When paying out the heating cable, AVOID:

- Sharp edges
- Excessive pulling force or jerking
- Kinking and crushing
- Walking on it, or running over it with equipment

⚠ **WARNING:** Fire and shock hazard. Do not install damaged cable. Connection kits and cable ends must be kept dry before and during installation.

Positioning heating cables

If possible, position the heating cable on the lower section of the pipe, at the 4 or 8 o'clock positions, as shown below, to protect it from damage.

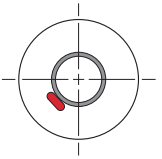

Figure 7: Cable positioning

Attaching the heating cable

Starting from the end opposite the reel, tape the heating cable to the pipe every 2 feet. Work back to the reel. Leave extra heating cable at the power connection, at all sides of splices and tees to allow for future servicing. See Table 1 on page 15.

- Install heating cable connection kits immediately after attaching the heating cable. If immediate installation is not possible, protect the heating cable ends from moisture.

Bending the cable

When positioning the heating cable on the pipe, do not bend tighter than ½” radius. The heating cable does not bend easily in the flat plane. Do not force such a bend, as the heating cable will be damaged.

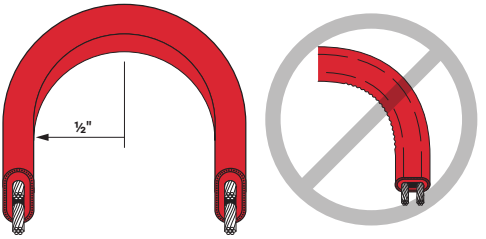

Figure 8: Bending technique

Crossing the cable

HWAT heating cables are self-regulating and may be overlapped whenever necessary without overheating or burning out.

Cutting the cable

Cut the heating cable to the desired length after it is attached to the pipe. HWAT can be cut to length without affecting the heat output per foot.

Attachment tapes

To ensure that the heating cable is in full contact with the pipe, use tape to attach the heating cable to the pipe every 2 ft (.6 m). Use nVent RAYCHEM GT-66 attachment tape. One roll will handle approximately 50 ft (15 m) of cable.

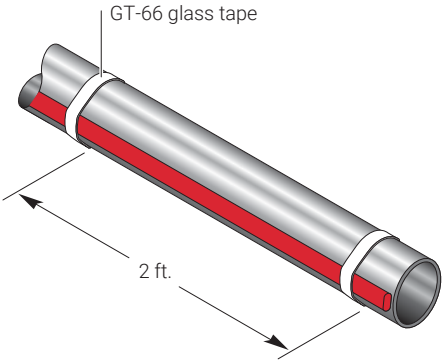

Figure 9: Attaching the heating cable

To ensure sufficient heat transfer nVent RAYCHEM AT-180 aluminum tape must be used to install the heating cable on plastic pipes as shown in Figure 10.

⚠ **WARNING:** Do not use metal attachments such as pipe straps or tie wire. Do not use vinyl-based electrical or duct tape. Use only nVent approved tapes.

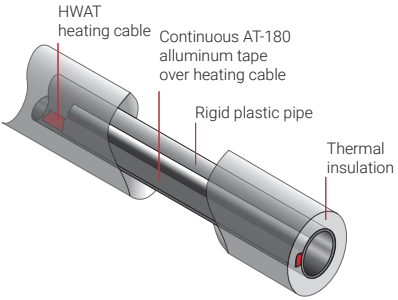

Figure 10: Installed on plastic pipe with aluminum tape

4. HEATING CABLE COMPONENTS

4.1 General Connection Kit Information

RayClic connection kits or nVent RAYCHEM HWT-P and FTC-HST-PLUS heat shrink kits must be used with HWAT-P1 or HWAT-R2 heating cables. A complete circuit requires a power connection and an end seal. Splices and tees and other connection kits are used as needed. Use the HWAT System Design Guide (H57510) to select appropriate connection kits. Installation instructions are included with every connection kit. Steps for preparing the heating cable and installing connection kits must be followed. HWAT connection kit locations should be noted on “As Built” drawings. Connection kit locations should be marked on the outside of the insulation cladding with the labels provided in the kits.

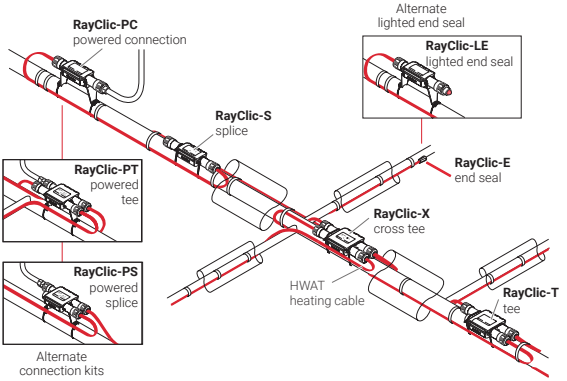

Figure 11: RayClic connection system

Connection kit installation

- When practical, mount the connection kits on top of the pipe. All heating cable connections must be mounted above grade level.
- Leave excess cable to serve as a service loop at all connection kits (power, splice, cross or tee) for future maintenance, as detailed in Table 1. The additional heating cable will easily pay for itself in time savings if it becomes necessary to check or replace a connection kit after installation. Splices and tees should have a service loop on each of the heating cables entering the connection kit.

Table 1: Service loops for each connection kit

Connection kit name	# of cable connections/kit	Cable length/ connection	Total cable length (Service loop)
RayClic-PC	1	2.0 ft (0.6 m)	2 ft (0.6 m)
RayClic-S	2	1.0 ft (0.3 m)	2 ft (0.6 m)
RayClic-T	3	1.0 ft (0.3 m)	3 ft (0.9 m)
RayClic-X	4	1.0 ft (0.3 m)	4 ft (1.2 m)
RayClic-PS	2	1.5 ft (0.5 m)	3 ft (0.9 m)
RayClic-PT	3	1.3 ft (0.4 m)	4 ft (1.2 m)
RayClic-E	1	NA	NA
RayClic-LE	1	2.0 ft (0.6 m)	2.0 ft (0.6 m)
FTC-HST-PLUS	2 or 3	1.0 ft (0.3 m)	2 ft (0.6 m) for a splice 3 ft (0.9 m) for a tee
HWT-P	1	2.0 ft (0.6 m)	2 ft (0.6 m)

- All power connection kits must be installed in accessible locations. Access to splices, tee kits and end seals is recommended for future modification or maintenance but is not required.
- Locate junction boxes for easy access but not where they may be exposed to mechanical abuse.
- Heating cables must be installed over, not under, pipe straps used to secure components.

⚠ **WARNING:** The black heating cable core is electrically conductive and can short. It must be properly insulated and kept dry. Damaged bus wires can overheat or short.

⚠ **WARNING:** Fire and shock hazard.
nVent RAYCHEM brand specified components must be used. Do not substitute parts or use vinyl electrical tape.

⚠ **WARNING:** Water temperature above 130°F (55°C) presents a significant risk of personal injury and/or death and requires that scald protection measures be implemented for safe use.

5. CONTROL AND MONITORING

5.1 HWAT-ECO-GF and ACS-30 Controllers

The HWAT-ECO-GF controller is designed for use with HWAT-P1 or HWAT-R2 heating cable. It must be used to ensure proper water temperature and to optimize energy consumption. For HWAT-P1 operation, a pipe temperature sensor on the least used pipe is also mandatory.

Refer to the HWAT-ECO-GF Installation and Operation Manual (H60223) for the installation and operation instructions of the controller.

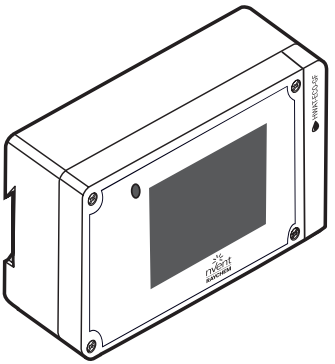

Figure 12: HWAT-ECO-GF controller

The ACS-30 Control System is approved for use with HWAT-R2 heating cable only. Refer to the ACS-30 Programming Guide (H58692) for the installation and operating instructions of the control system.

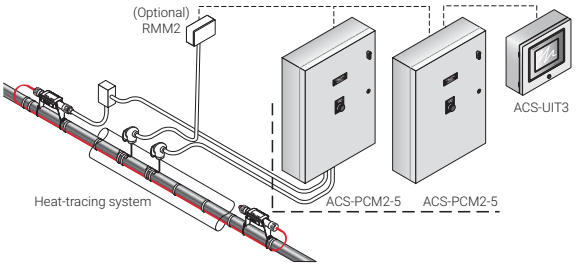

Figure 13: ACS-30 Control System

6. THERMAL INSULATION

6.1 Insulating the System

Pipes must be insulated with the correct thermal insulation to maintain the desired pipe temperatures. For pipes 1¼ inches and smaller, use insulation that is oversized by ¼ inch to allow room for insulating over the heating cables. The thermal insulation schedule is shown in Table 2.

Table 2: Fiberglass insulation schedule

Copper pipe size (in)	IPS insulation size (in)	Insulation thickness (in)
½	¾	½
¾	1	1
1	1¼	1
1¼	1½	1½
1½	1½	1½
2	2	2
2½	2½	2½
3	3	3

Important: For pipes 3 inches and larger, the thickness of insulation can be equal to the pipe diameter with one run of heating cable or $^1/_3$ the pipe diameter with two runs of heating cable.

6.2 Insulation Installation

- Before insulating the pipe, visually inspect the heating cable and connection kits to ensure they are properly installed and there are no signs of damage. Damaged cable or connection kits must be replaced.
- Check that the insulation type and thickness complies with the insulation schedule detailed in Table 2.
- Insulate the pipes immediately after the heating cable is installed and has passed all tests to minimize damage to the cable.
- Insulate the pipe at floor and wall penetrations. Failure to do so will cause cold spots in the water system and could lead to damage to the heating cable.

- If local codes do not allow this, the heating cable should be run through a conduit or channel before the firestop is installed. Use a fire-resistant sealing compound such as STI Firestop, Dow Corning Fire Stop, 3M Fire Barrier, or T&B Flame-Safe.
- Do not use staples to close the insulation. Use tape or the adhesive-lined edge of the insulation to ensure that the seam remains sealed. Staples can damage the HWAT heating cable.

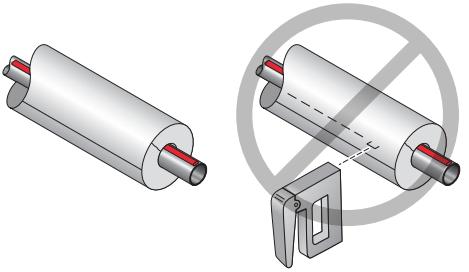

Figure 14: Sealing the insulation seam

- When installing splice, tee and end seal kits underneath the thermal insulation, mark the location of splices, tees, and end seals on the outside of the insulation, with labels provided in the kits, while installing the insulation.
  Use large diameter insulation or sheets to cover splices, tees, or service loops.

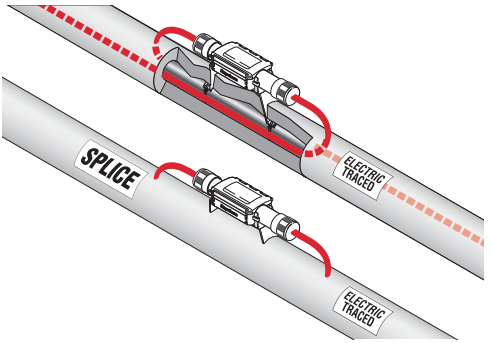

Figure 15: Installing Connection kits above insulation.

- All power connection kits must be mounted above the thermal insulation.
- Splice and Tee connection kits may be installed above the insulation using the optional nVent RAYCHEM RayClic SB-04 mounting bracket. The pipe and heating cable service loops must be fully insulated as shown above.

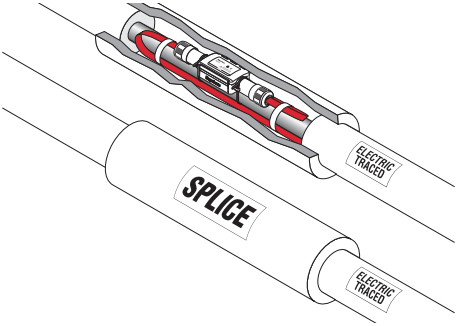

Figure 16: Installing connection kits below insulation.

- Make sure that all heat-traced piping, fittings, wall penetrations, and branch piping are insulated. Correct temperature maintenance requires properly installed and dry thermal insulation. Uninsulated sections of pipe can result in cold spots.
- After installing insulation, electrical codes require that you install “Electric Traced” labels along the piping at suitable intervals (10-foot intervals recommended) on alternate sides.

⚠ **WARNING:** Use only fire-resistant insulation, such as fiberglass.

7. POWER SUPPLY AND ELECTRICAL PROTECTION

7.1 Voltage Rating

Verify that the supply voltage is either 120 V or 208–277 V as specified by the HWAT system design.

7.2 Circuit Breaker Sizing

Circuit breakers must be sized using the cable lengths shown in Table 3. Do not exceed the maximum circuit length shown for each breaker size. Ground-fault protection is integrated into the HWAT-ECO-GF and ACS-30 control system so no additional protection is required.

Table 3: Maximum circuit length in feet (meters)

Breaker Size	HWAT-P1 @ 120 V	HWAT-R2 @ 208-277 V
10 Amp	125 (38)	
15 Amp	195 (59)	250 (75)
20 Amp	276 (84)	330 (110)
30 Amp	395 (120)	500 (150)

7.3 Electrical Loading

Over-current devices are selected according to the heating cable type, supply voltage, and circuit length to allow for start-up. The design specifies the size and type of over-current device. Piping systems are seldom installed exactly as the drawings show. If changes are made, make sure that all circuit lengths comply with Table 3.

7.4 Ground-Fault Protection

If the heating cable is improperly installed, or physically damaged to the point that water contacts the bus wires, sustained arcing or fire could result. If arcing does occur, the fault current may be too low to trip conventional circuit breakers. nVent, the U.S. National Electrical Code, and the Canadian Electrical Code require both ground-fault protection of equipment and a grounded metallic covering on all heating cables. All HWAT heating cables meet the metallic covering requirements. Ground-fault protection must be provided by the installer. The HWAT-ECO-GF and ACS-30 controllers have built in ground-fault of equipment protection.

⚠ **WARNING:** To minimize the danger of fire from sustained electrical arcing if the heating cable is damaged or improperly installed, and to comply with nVent requirements, agency certifications, and national electrical codes, ground-fault equipment protection must be used on each heating cable branch circuit. Arcing may not be stopped by conventional circuit breakers.

⚠ **WARNING:** Disconnect all power before making connections to the heating cable.

8. COMMISSIONING AND PREVENTIVE MAINTENANCE

nVent requires a series of commissioning tests be performed on the HWAT system. These tests are also recommended at regular intervals for preventive maintenance. Results must be recorded and maintained for the life of the system, utilizing the “Installation and Inspection Record” (refer to Section 11). Submit this manual with initial commissioning test results to the owner.

Ensure that your water heater and mixing valve temperature are set at your desired pipe maintain temperature.

Important: Exceeding185°F (85°C) for HWAT-P1 or HWAT-R2 will decrease the power output of the cables over time.

8.1 Tests

A brief description of each test is found below. Detailed test procedures are found in Section 9.

Visual inspection

Visually inspect the pipe, insulation, and connections to the heating cable for physical damage. Check that no moisture is present, electrical connections are tight and grounded, insulation is dry and sealed, and control and monitoring systems are operational and properly set. Damaged heating cable must be replaced. Once the heating cable is installed any repairs to pipes should be done very carefully. The heater must be shielded from excessive heat. Temperatures greater than 185°F will permanently damage the affected section of heater. Damage due to excessive external heat may or may not effect the operation of the entire circuit. A torch must not be used on the pipe, pipe hangers, or riser clamps after the heating cable has been installed on the pipe because this can cause permanent damage to the heating cable (even if it does not appear to be burned). Use a saw, not a torch, to cut riser clamps. If use of a torch is unavoidable, cut the fiberglass tape that holds the HWAT cable to the pipe on either side of the area to be heated, and pull the cable away from the pipe. Make sure you do not cut the HWAT cable. Shield the cable from the flame. Charred or damaged cable must be replaced to avoid the risk of arcing or fire.

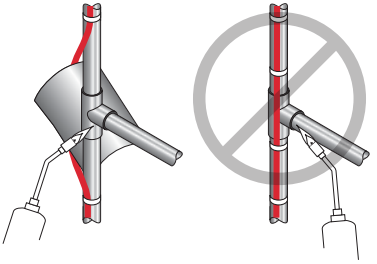

Figure 17: Shielding the cable from the flame

Circuit length verification (capacitance test)

The installed circuit length is verified through a capacitance measurement of the HWAT heating cable. Compare the calculated installed length against the system design. If the calculated length is shorter than the system design, confirm all connections are secure and the grounding braid is continuous.

Insulation resistance

Insulation Resistance (IR) testing is used to verify the integrity of the heating cable inner and outer jackets. IR testing is analogous to pressure testing a pipe and detects if a hole exists in the jacket.

Power check

The power check is used to verify that the system is generating the correct power output. This test can be used in commissioning to confirm that the circuit is functioning correctly. For on-going maintenance, compare the power output to previous readings.

The heating cable power output per foot is calculated by dividing the total wattage by the total length of a circuit. The current, voltage, operation temperature and length must be known. Circuit length can be determined from “as built” drawings, meter marks on the cable or with the capacitance test. The watts per foot can be compared to the heating cable output in Section 9 for an indication of heating cable performance:

Ground-fault test

Test all ground-fault breakers, including those integral to the HWAT-ECO-GF and ACS-30 controllers, per manufacturer's instructions.

Cable and connection continuity

Cable and connection continuity test verifies all the electrical connections are made properly. nVent recommends conducing this test as the cable is installed to identify any potential problems immediately. This test can also be conducted after the entire cable run is installed but before end seals are applied.

8.2 Preventative Maintenance

Recommended maintenance for HWAT systems consists of performing the system tests for commissioning, and on a regular basis Procedures for these tests are described in Section 9. systems should be checked each year. If the HWAT system fails any of the tests, refer to Section 10 for trouble shooting assistance. Make the necessary repairs and replace any damaged cable immediately. De-energize all circuits that may be affected by maintenance. Protect the heating cable from mechanical or thermal damage during maintenance work.

Maintenance records

The "Installation and Inspection Record," (refer to Section 11) should be filled out during all maintenance and repairwork and kept for future reference.

Repairs

Use only HWAT heating cable, an HWAT-ECO-GF or ACS-30 controller, and RayClic, HWT-P or FTC-HST-PLUS connection kit when replacing any damaged heating cable system. Repair the thermal insulation to original condition or replace with new insulation, if damaged. Retest the system after all repairs or replacements.

⚠ **WARNING:** Damage to cables or components can cause sustained electrical arcing or fire. Do not attempt to repair damaged heating cable. Do not energize cables that have been damaged by fire. Replace damaged cable at once by removing the entire damaged section and splicing in a new length using the appropriate RayClic or FTC-HST-PLUS splice kits.

9. TEST PROCEDURES

9.1 System Tests

The following tests must be done after installing the connection kits, but before the thermal insulation is applied to the pipe:

1. Visual inspection
2. Insulation resistance test

After the thermal insulation has been installed on the pipe, the following tests must be performed:

1. Visual inspection
2. Insulation resistance test
3. Circuit length verification (capacitance test)
4. Power test
5. Temperature test

All test procedures are described in this manual. It is the installer's responsibility to perform these tests or have an electrician perform them. Record the results in the Installation and Inspection Record in Section 11.

1. Visual inspection test

- Check inside all power, splice and tee kits for proper installation, overheating, corrosion, moisture, or loose connections.
- Check the electrical connections to ensure that ground and bus wires are insulated over their full length.
- Check for damaged, missing or wet thermal insulation.
- Check that end seals, splices, and tees are properly labeled on insulation cladding.
- Check HWAT-ECO-GF or ACS-30 controller for proper setpoint and operation. Refer to the HWAT-ECO-GF Installation and Operation Manual or ACS-30 Programming Guide for details.

2. Insulation Resistance test frequency

Insulation resistance testing is required during the installation process, and as part of regularly scheduled maintenance, as follows:

- Before installing the cable
- Before installing components
- Before installing the thermal insulation
- After installing the thermal insulation
- Prior to initial start-up (commissioning)
- As part of the regular system inspection
- After any maintenance or repair work

Procedure

Insulation resistance testing (using a megohmmeter) should be conducted at three voltages; 500, 1000, and 2500 Vdc. Potential problems may not be detected if testing is done only at 500 and 1000 volts. First measure the resistance between the heating cable bus wires and the braid (Test A), then measure the insulation resistance between the braid and the metal pipe (Test B). Do not allow test leads to touch junction box, which can cause inaccurate readings.

Important: System tests and regular maintenance procedures require that insulation resistance testing be performed. Test directly from the HWAT-ECO-GF, ACS-30, HWT-P or the junction box closest to the RayClic-PC.

WARNING: Fire hazard in hazardous locations. Insulation resistance test can produce sparks. Be sure there are no flammable vapors in the area before performing this test.

Insulation resistance criteria

A clean, dry, properly installed circuit should measure thousands of megohms, regardless of the heating cable length or measuring voltage (500–2500 Vdc). The following criteria are provided to assist in determining the acceptability of an installation where optimum conditions may not apply.

- All insulation resistance values should be greater than 1000 megohms. If the reading is lower, consult Section 10, Troubleshooting Guide.

Important: Insulation resistance values for Test A and B for any particular circuit should not vary more than 25 percent as a function of measuring voltage. Greater variances may indicate a problem with your heat-tracing system, confirm proper installation and/or contact nVent for assistance.

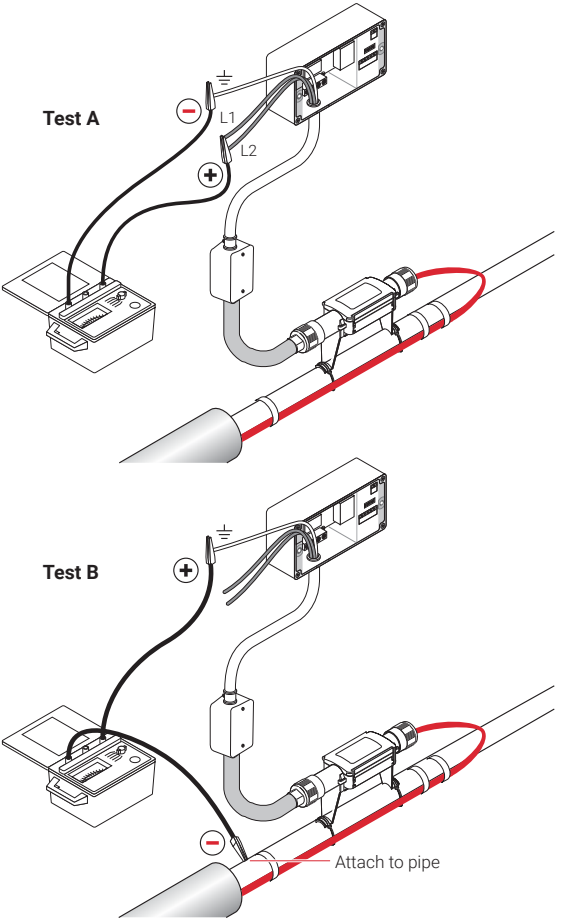

Figure 18: Insulation resistance test

Insulation resistance test procedure

1. De-energize the circuit.
2. Disconnect the HWAT-ECO-GF or ACS-30 controller if installed.
3. Disconnect bus wires from terminal block.
4. Set test voltage at 0 Vdc.
5. Connect the negative (—) lead to the heating cable metallic braid or RayClic green wire.
6. Connect the positive (+) lead to both heating cable bus wires or RayClic black wires.
7. Turn on the megohmmeter and set the voltage to 500 Vdc; apply the voltage for 1 minute. Meter needle should stop moving. Rapid deflection indicates a short. Record the insulation resistance value in the Inspection Record.
8. Repeat Steps 4–7 at 1000 and 2500 Vdc.
9. Turn off the megohmmeter.
10. If the megohmmeter does not self-discharge, discharge phase connection to ground with a suitable grounding rod. Disconnect the megohmmeter.
11. Repeat this test between braid and pipe.
12. Reconnect bus wires to terminal block.
13. Reconnect the HWAT-ECO-GF controller.

3. Circuit length verification (capacitance test)

Connect the capacitance meter negative lead to both bus wires and the positive lead to the braid wire. Set the meter to the 200 nF range. Multiply this reading by the Capacitance factor for the correct heating cable shown below to determine the total circuit length.

Length (ft or m) = Capacitance (nF) x Capacitance factor (ft or m/nf)

Table 4: Capacitance factors

Heating Cable	Capacitance ft/nF	Factor m/nF
HWAT-P1	5.4	1.6
HWAT-R2	5.8	1.8

Compare the calculated circuit length to the design drawings and circuit breaker sizing tables.

Figure 19: Capacitance test

4. Power check

The power output of self-regulating heating cable is temperature-sensitive and requires the following special procedure to determine its valuebefore powering the HWAT-P1 or R2 heating cable.

Important: Run hot water through the piping system before powering the HWAT heating cable. This will ensure the system is at a uniform pipe temperature. Dot not power the system when the pipe temperature is below 50°F(10°C).

1. Power the heating cable and allow it to stabilize for 2 hours, then measure current and voltage at the junction box. If a controller is used, refer to details below.
2. Measure the pipe temperature under the thermal insulation at several locations.
3. Calculate the power of the heating cable by multiplying the current by the input voltage and dividing by the actual circuit length.

$$\text{Power (w/ft or m)} = \frac{\text{Volts (Vac) x Current (A)}}{\text{Length (ft or m)}}$$

The power calculated should be similar to the value generated by:

Rated Power (w/ft or m) = Volts (Vac) x Rated Current

Table 5: Rated Current (A/ft or m)

Heating Cable	Pipe Temperature	Rated Current (A/ft or m)
HWAT-P1	125˚F (52˚C)	.0264 (.087)
HWAT-R2	140˚F (60˚C)	.017 (.056)

5. Temperature test

When testing an HWAT system for temperatures it is important to test in an appropriate sequence. Testing should start at the point of use closest to the water heater and progress out.

Testing should be done after a minimum of 4 hours of no water usage. This will ensure that the temperatures indicated are not due to flow conditions. It is a good idea to turn off all cold water valves to eliminate the possibility of introducing cold water to the hot side via a cross connection.

The following example illustrates a typical temperature test sequence for an HWAT system.

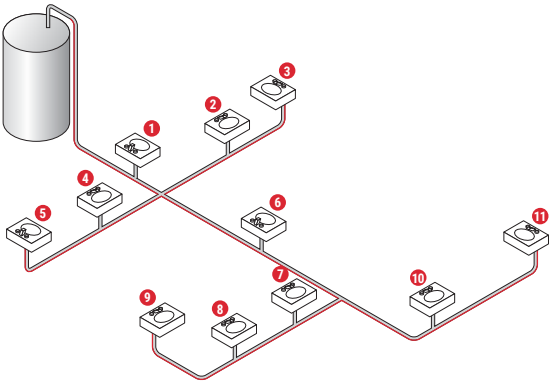

Figure 20: Typical temperature test sequence

9.2 Fault Location Tests

There are three methods used for finding a fault within a section of heating cable:

1. Ratio method
2. Conductance method
3. Capacitance method

1. Ratio method

The ratio method uses resistance measurements taken at each end of the heating cable to approximate the location of a **bus wire short.** A shorted heating cable could result in a tripped circuit breaker. If the resistance can be read on a standard ohm meter this method can also be used to find a fault from a bus wire to the ground braid. This type of short would trip a GFPD and show a failed reading. Measure the bus-to-bus heating cable resistance at each end (measurement A and measurement B) of the suspected section.

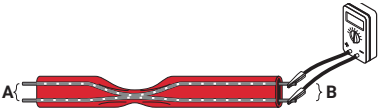

Figure 21: Cable resistance measurement test

The approximate location of the fault, expressed as a percentage of the heating cable length from the front end, is:

Fault location: $D = \frac{A}{(A + B)} X\ 100$

Example: A = 1.2 ohms

B = 1.8 ohms

Fault location: D = 1.2 / (1.2 + 1.8) x 100 = 40%

The fault is located 40% into the circuit as measured from the front end.

To locate a low resistance ground fault, measure between bus and braid.

Figure 22: Low resistance ground-fault test

The approximate location of the fault, expressed as a percentage of the heating cable length from the front end is:

Fault location: $D = \frac{A}{(A + B)} X 100$

Example: A = 1.2 ohms

B = 1.8 ohms

Fault location: D = 1.2 / (1.2 + 1.8) x 100 = 40%

The fault is located 40% into the circuit as measured from the front end

2. Conductance method

The conductance method uses the core resistance of the heating cable to approximate the location of a fault when the heating cable has been severed and the bus wires have not been shorted together. A severed cable may result in a cold section of pipe and may not trip the circuit breaker.

Measure the bus-to-bus heating cable resistance at each end (measurement A and measurement B) of the suspect section. Since self-regulating cables are a parallel resistance, the ratio calculations must be made using the conductance of the cable.

Figure 23: Cable resistance measurement

The approximate location of the fault, expressed as a percentage of the heating cable length from the front end, is:

Fault location: $D = \frac{1/A}{(1/A + 1/B)} X 100$

Example: A = 100 ohms

B = 25 ohms

Fault location: $D = (^1/_{100}) / (^1/_{100} + ^1/_{25}) \times 100 = 20\%$

The fault is located 20% from the front end of the circuit.

3. Capacitance method

This method uses capacitance measurement (nF) as described in 3. Circuit length verification (capacitance test) on page 28, to approximate the location of a fault where the heating cable has been severed, or a connection kit has not been connected.

Record the capacitance reading from one end of the heating cable. The capacitance reading should be measured between both bus wires twisted together (positive lead) and the braid (negative lead). Multiply the measured capacitance with the heating cable's capacitance factor as listed in the following example:

Example:	HWAT-R2 = 16.2 nF
Capacitance factor =	5.8 ft/nF
Fault location =	42.2 nF x 5.8 ft/nF = 245 ft (75 m) from reading location

As an alternative, capacitance values from each end. The ratio of one capacitance value taken from one end (A) divided by the sum of both A and B (A + B) and then multiplied by 100 yields the distance from the first end, expressed as a percentage of the total heating cable circuit length. See Table 4 on page 29, for capacitance factors.

Fault location: $D = \frac{A}{(A + B)} X 100$

9.3 Cable and Connection Continuity Test

To complete a continuity test it is best to start the installation with a power connection kit. A completed power connection kit allows for easier testing. The bus wires and braid can be temporarily connected together at the power connection end (Figure 24) and resistance can be tested at the other end as each additional component is added to the system.

Process

1. De-energize the circuit
2. Disconnect cable bus wires and ground wire
3. Temporarily connect cable bus wires and ground wire together with a wire nut (Figure 24)

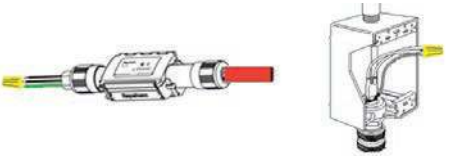

Figure 24:

4. Go to the end of the heating cable run and measure resistance using an ohm meter.
5. A resistance reading should be taken for each bus wire to braid and then bus wire to bus wire. Braid to A should equal Braid to B, A to B will be slightly higher. (Figure 25)

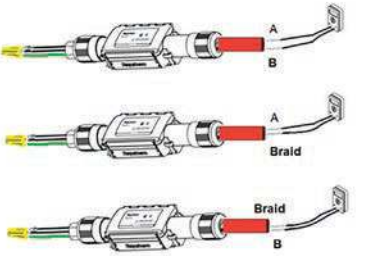

Figure 25:

6. If a higher reading is measured on one of the tests all connections are not completed and there is not continuity for one or both of the bus wires.
7. If resistance values of braid to A and braid to B are not within 20% of each other inspect all connection kits (splice, tee, and cross) between the power connection and the cable end that is being tested.
8. If resistance values of braid to A and braid to B are within 20% of each other the cable continuity is intact. Continue with system installation.
9. Repeat test procedures for all branch lines to verify entire heat tracing circuit.
10. After entire circuit passes continuity test, remove wire nut on power connection kit and connect to heat trace controller.

Note: Readings can be taken at a previously installed RayClic power, splice, tee or cross connection by using the test ports available inside the component (see figure 26). Testing at a RayClic will only confirm continuity to the previous components; it will not verify continuity to the cable end seal.

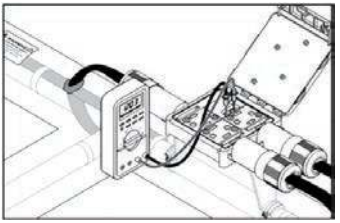

Figure 26:

10. TROUBLESHOOTING GUIDE

Symptom	Probable Causes
Low water temperature	Insulation is wet, or missing.
	HWAT-ECO-GF controller lowered the pipe setpoint temperature because water heater is cold.
	Ambient too low.
	Improper voltage applied.
	Improper insulation thickness used.
	HWAT-ECO-GF or ACS-30 was set incorrectly.
	Cold water is being introduced into the hot water system.
	Tripped circuit breaker.

Symptom	Probable Causes
Low or no power output	Low or no input voltage applied.
	The circuit is shorter than the design shows, due to splices or tees not being connected, or the heating cable having been severed.
	Improper component connection causing a high-resistance connection.
	HWAT-ECO-GF or ACS-30 set wrong or incorrectly wired.
	The heating cable has been exposed to excessive temperature, moisture or chemicals.

Corrective Action

Remove wet insulation and replace with dry insulation, and secure it with proper weatherproofing.

Verify the HWAT-ECO-GF water heater setting, water heater temperature, and sensor placement; and correct as required.

Set the HWAT-ECO-GF or ACS-30 to the appropriate ambient temperature.

Refer to the HWAT-ECO-GF Installation and Operation Manual (H60223) to set the HWAT-ECO-GF to the correct voltage (120 V, 208–277 V).

Contact your nVent representative to confirm the design and modify as recommended.

Refer to the HWAT-ECO-GF Installation and Operation Manual (H60223) or ACS-30 Programming Guide (H58692) for the correct settings.

Verify that the plumbing fixtures and valves are operating properly.

See “Circuit breaker trips” section of this Troubleshooting Guide.

Corrective Action

Repair the electrical supply lines and equipment.

Check the routing and length of heating cable (use “as built” drawings to reference actual pipe layout). Connect all splices or tees. Locate and replace any damaged heating cables. Then recheck the power output.

Examine connection kits for proper installation. Check for loose wiring connections and rewire if necessary.

Refer to the HWAT-ECO-GF Installation and Operation Manual (H60223) or ACS-30 Programming Guide (H58692) for the correct settings.

Check the pipe temperature. Verify heater selection. Check the power output of the heating cable per the design vs. actual. Reduce pipe temperature if possible or contact your nVent representative to confirm design.

Replace damaged heating cable. Check the pipe temperature. Check the power output of heating cable.

Symptom	Probable Causes
Circuit breaker trips	Circuit breaker is undersized.
	Connections and/or splices are shorting out.
	Physical damage to heating cable is causing a direct short.
	Bus wires are shorted at the end.
	Circuit lengths too long.
	Nick or cut exists in heating cable or power feed wire with moisture present or moisture in connections.
	GFPD is undersized (5 mA used instead of 30 mA) or miswired.

Symptom	Probable Causes
Low or inconsistent insulation resistance	Nicks or cuts in the heating cable.
	Short between the braid and heating cable core or the braid and pipe.
	Arcing due to damaged heating-cable insulation.
	Moisture present in the components.
	Test leads touching the junction box.

Corrective Action

Recheck the design for startup temperature and current loads. Do not exceed the maximum circuit length for heating cable used. Replace the circuit breaker, if defective or improperly sized.

Visually inspect the connection systems. Replace if necessary.

Check for damage around the valves and any area where there may have been maintenance work. Replace damaged sections of heating cable.

Check the end seal to ensure that bus wires are not shorted. If a dead short is found, the heating cable may have been permanently damaged by excessive current and may need to be replaced.

Separate the circuit into multiple circuits that do not exceed max circuit lengths.

Replace the heating cable, as necessary. Dry out and reseal the connections and splices. Using a megohmmeter, retest insulation resistance.

Corrective Action

If heating cable is not yet insulated, visually inspect the entire length for damage, especially at elbows and flanges and around valves. If the system is insulated, remove the connection kits one-by-one to isolate the damaged the section.

Replace damaged heating-cable sections.

If moisture is present, dry out the connections and retest. Be sure all conduit entries are sealed, and that condensate in conduit cannot enter power connection boxes. If heating-cable core or bus wires are exposed to large quantities of water, replace the heating cable. (Drying the heating cable is not sufficient, as the power output of the heating cable can be significantly reduced.)

Clear the test leads from junction box and restart.

11. TROUBLESHOOTING GUIDE

nVent Installation and Inspection Record Test Date:_____

Facility:

Commission Inspection date:

Inspected by (Name):

Panel and Circuit Breaker Number:

Water heater/mixing valve temperature setting (°F)

Designed circuit length (ft):

Capacitance test

nF:

Cap factor (Table 4):

nF X Cap Factor= (ft/m)

HWAT-ECO-GF setting:

Heating cable type:

Voltage:

Ambient Temp:

Set point: Maintain

Power factor

Test Date:

Visual Inspection

Confirm 30-mA ground-fault device (proper rating/function)

Confirm all electrical connections in the RayClic, FTC-HST-PLUS or HWT-P and HWAT-ECO-GF are tight and wires secure.

Visual inspection inside connection boxes for overheating, corrosion, moisture, loose connections and other problems.

Proper electrical connection, ground, and bus wires insulated over full length.

Correct thermal insulation used for each pipe size (Reference Table 2)

Damaged or missing thermal insulation for the entire hot water piping system.

Covered end seals, splices, and tees properly labeled on insulation.

Check HWAT-ECO-GF for moisture, corrosion, setpoint, switch operation

Insulation resistance test

Bus to braid (Test A)	500 Vdc
	1000 Vdc
	2500 Vdc
Braid to pipe (Test B)	500 Vdc
	1000 Vdc
	2500 Vdc

Power and temperature check

Panel voltage (V)

Circuit voltage (V)

Circuit end (V)

Circuit amps after 2 hours (A)

Pipe temperature (°F)

(Circuit Number)

	megohm	**megohm**	**megohm**	**megohm**

North America
Tel +1.800.545.6258
Fax +1.800.527.5703
thermal.info@nVent.com

nVent.com/RAYCHEM

©2023 nVent. All nVent marks and logos are owned or licensed by nVent Services GmbH or its affiliates. All other trademarks are the property of their respective owners. nVent reserves the right to change specifications without notice.

RAYCHEM-IM-H57548-HWATsystem-EN-2310