FTC-HST-PLUS

XL-Trace Edge, RaySol, WFP, GM, HWAT and IceStop Splice/Tee Connection Installation Instructions

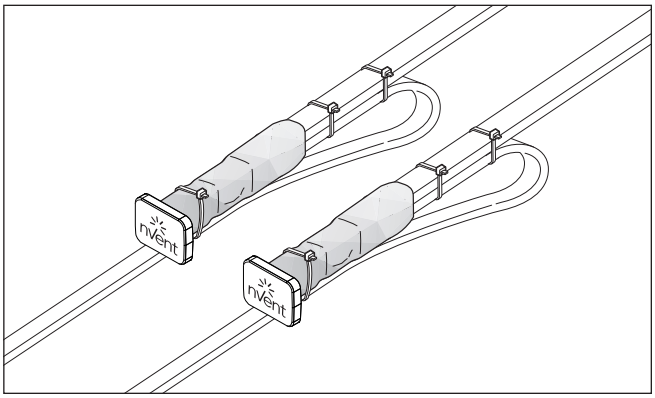

APPROVALS

c UL us LISTED

UL LISTED With Raysol, Icestop

SP with IceStop cable -WS
with HWAT -G
with Raysol -W

KIT CONTENTS

Item	Qty	Description
A	4	Insulated bus wire crimps
B	4	Uninsulated braid crimps; 2 large, 2 small
C	6	Cable ties
D	16	Mastic strips
E	2	End plugs
F	2	Heat-shrinkable tubes (5 in long, 1.5 inch diameter)
G	2	Black cloth tapes (6 in long)
H	2	Clamp tie

DESCRIPTION

The nVent RAYCHEM FTC-HST-PLUS is for use with heating cables to make splice and tee connections. The kit contains materials for two splice or two tee connections. An nVent RAYCHEM RayClic-E end seal or WHES end seal for nVent RAYCHEM RIM systems is required when using FTC-HST-PLUS as a tee kit. These installation instructions should be used in conjunction with the nVent RAYCHEM XL-Trace Edge, RaySol, WFP, HWAT and IceStop Installation and Operation Manuals. For technical support, contact your nVent representative or call nVent at (800) 545-6258.

TOOLS REQUIRED

- Diagonal cutters
- Utility knife
- Needle nose pliers
- Heat gun or torch
- Crimp tools (Ideal 30-429 and T&B WT112M or WT2000)
- Hammer and nail (for gutter/downspout applications only)

IMPORTANT: First verify heating cable is appropriate for the application. The cable type is printed on the outer jacket:

IceStop and WFP:	Roof and gutter de-icing
XL-Trace Edge:	Above ground pipe freeze protection
RaySol:	Floor warming
HWAT:	Hot water temperature maintenance

The minimum installation temperature for the FTC-HST-PLUS splice and tee is 0°F (–18°C).

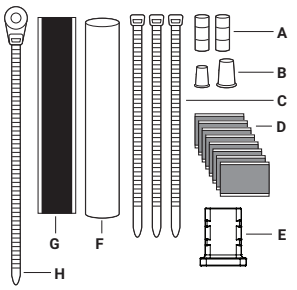

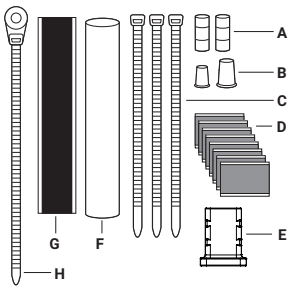

⚠ WARNING:

This component is an electrical device that must be installed correctly to ensure proper operation and to prevent shock or fire. Read these important warnings and carefully follow all the installation instructions.

- To minimize the danger of fire from sustained electrical arcing if the heating cable is damaged or improperly installed, and to comply with the requirements of nVent, agency certifications, and national electrical codes, ground fault equipment protection must be used. Arcing may not be stopped by conventional circuit breakers.
- Bus wires will short if they contact each other. Keep bus wires separated.
- Keep components and heating cable ends dry before and during installation.
- The black heating cable core is conductive and can short. It must be properly insulated and kept dry.
- Component approvals and performance are based on the use of nVent-specified parts only. Do not use substitute parts or vinyl electrical tape.
- Leave these instructions with end user for reference and future use.

⚠ CAUTION:

HEALTH HAZARD: Overheating heat-shrinkable tubes will produce fumes that may cause irritation. Use adequate ventilation and avoid charring or burning. Consult SDS at nVent.com for further information.

CHEMTREC 24-hour emergency telephone:
(800) 424-9300

Non-emergency health and safety information:
(800) 545-6258.

RAY3122

ITCSN

XL-Trace Edge, RaySol, WFP, GM and IceStop Splice or Tee Connections

The instructions are shown for a tee connection. Splice connections are done the same way, without the third heating cable section.

HEATING CABLE CONSTRUCTION

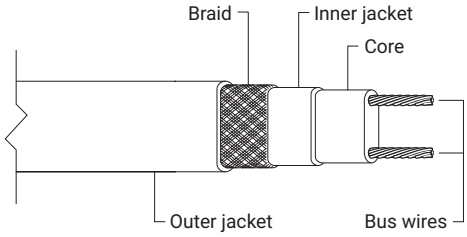

IceStop, XL-Trace Edge and RaySol Heating Cables

1

- Allow 12 in of extra heating cable as shown. If necessary trim cables evenly.

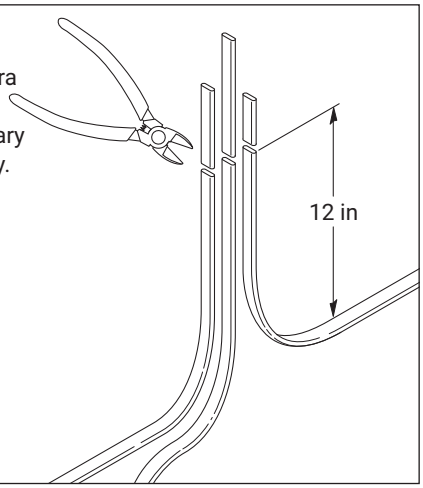

2

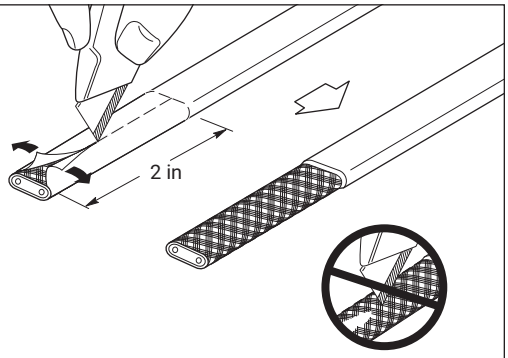

Do not cut braid or inner jacket.

- Lightly score completely around and then down outer jacket.
- Bend heating cable to break jacket at score then peel off outer jacket.

3

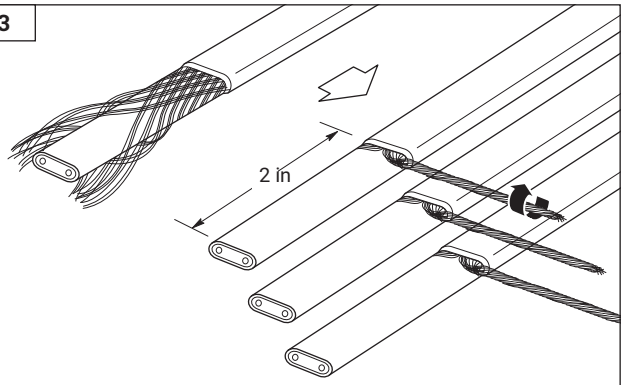

- Unravel the braid back 2 inches.
- Position braid on same side of each heating cable section.
- Straighten the braid and twist into a “pigtail”.

4

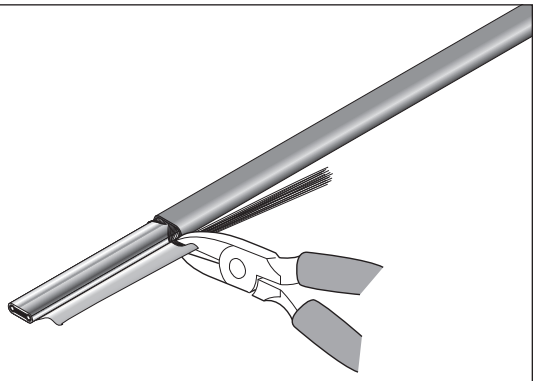

- **HWAT ONLY; otherwise go to step 5.**
- Using wire cutters, cut away aluminum wrap.

5

- At the end of each heating cable section lightly scorecompletely around and down inner jacket.

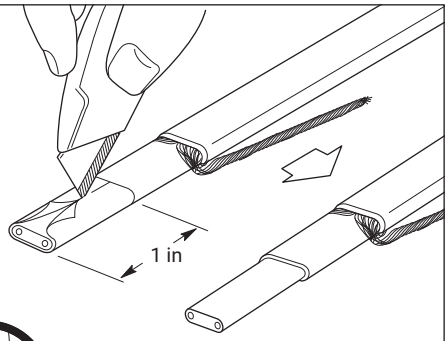

Do not cut bus wires.

- Bend heating cable to break jacket at score, then peel off inner jacket.

6

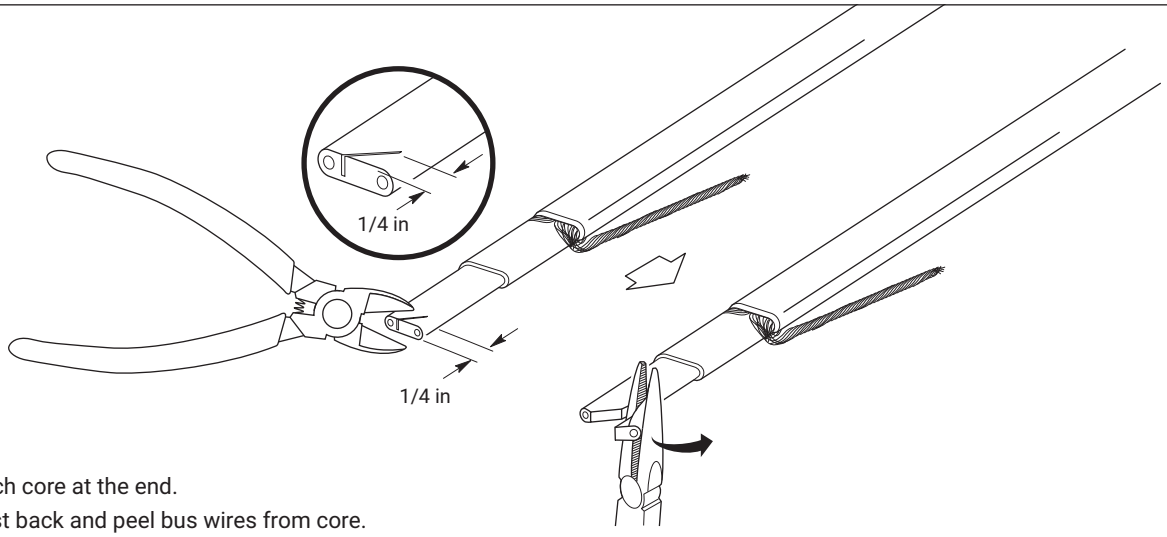

- Notch core at the end.
- Twist back and peel bus wires from core.

7

- Score between bus wires at base jacket.
- Bend core to break free at base jacket.

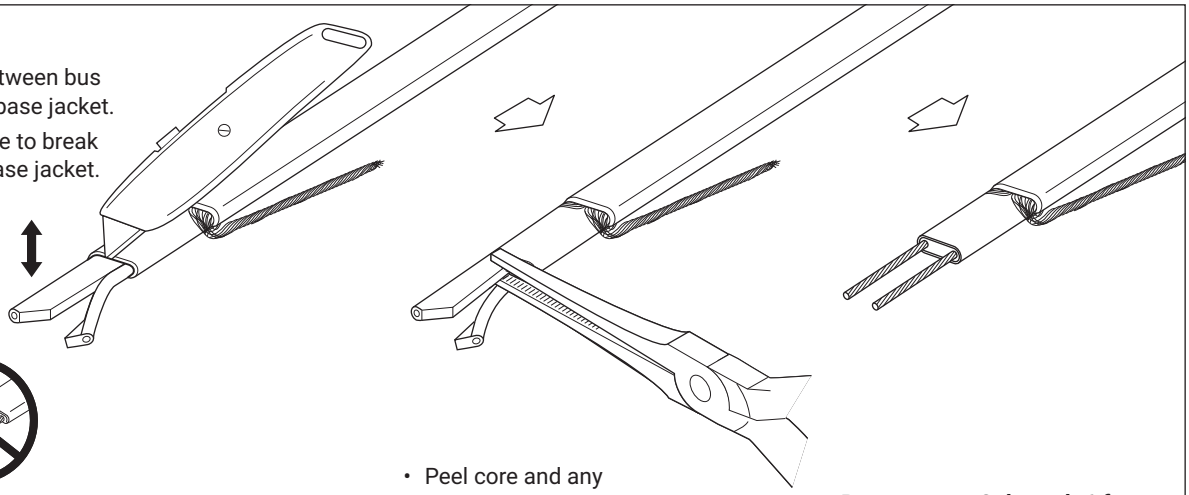

Do not cut bus wires.

- Peel core and any remaining material from bus wires.

Repeat steps 2 through 6 for other heating cable sections.

8

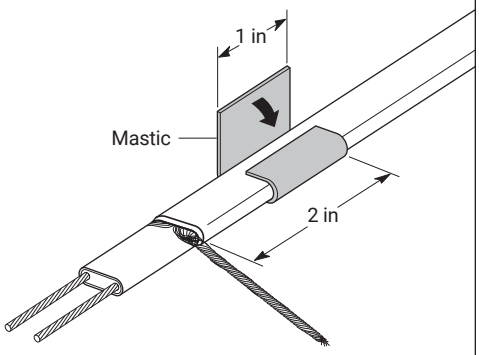

- Use clean gloves.
- Remove release paper from mastic strip.
- Don't let dirt or particles get into mastic.
- Wrap a piece of mastic around the outer jacket on each heating cable section.

9

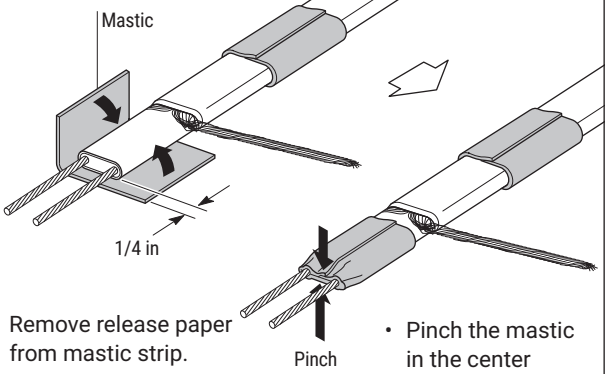

- Remove release paper from mastic strip.
- Wrap a piece of mastic around the end of each heating cable section and position as shown.
- Pinch the mastic in the center to completely seal the core at the end of each heating cable.

10

- Carefully align the heating cable sections and place them together.
- Press mastic strips firmly together.

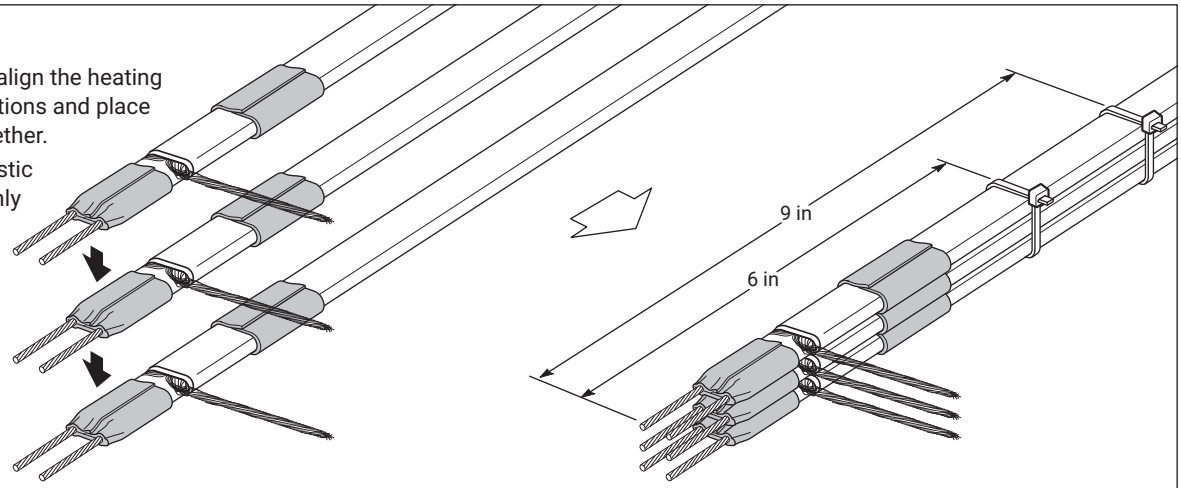

- Fasten with a cable tie at each of the two positions shown.

11

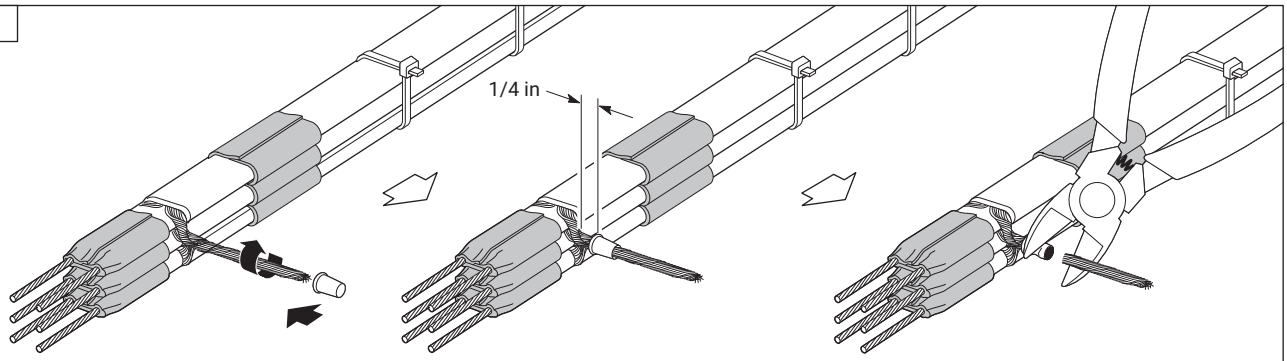

- Twist the braid pigtails together firmly.
- Slide uninsulated crimp over braid to within 1/4 inch of heating cable as shown.
- Crimp the braid, using the Ideal crimp tool.
- Crimp firmly to ensure the crimp is not loose.
- Cut off the extra braid.

Note: Use the large crimp for the HWAT cables and the small crimp for the other cables.

12

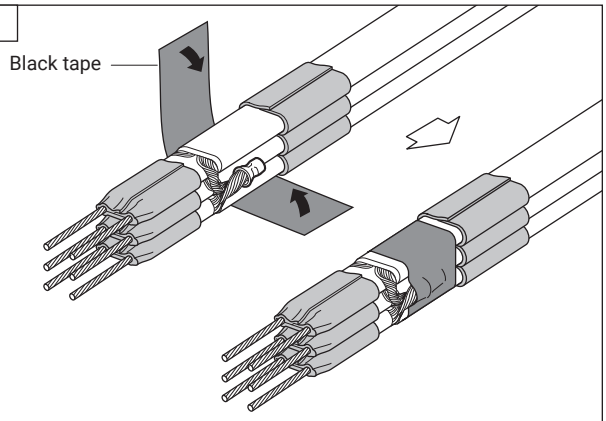

- Fold the crimped braid back against the heating cables.
- Wrap black cloth tape evenly around crimp and heating cables. Cover crimp completely.

⚠ **CAUTION: Ensure flat surface of crimp touches cables in order to have a less bulky shape.**

13

- Select one bus wire from each cable section and twist the wires together firmly.

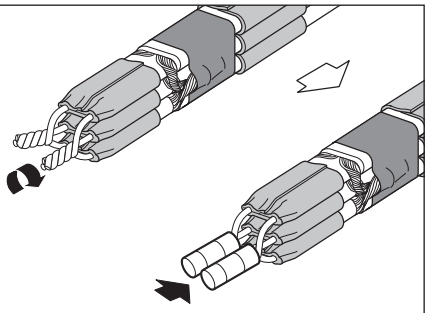

- Repeat with remaining bus wires.
  Be careful not to twist together bus wires from the same heating cable.
- Use insulated bus wire crimps and T&B crimp tool (Insulated cavity section) to crimp each set of bus wires together firmly to ensure crimps are not loose.

⚠ **CAUTION: Ensure there is no visible damage to the insulation layer of two crimps. After crimping, pull on crimp connection to check tightness.**

14

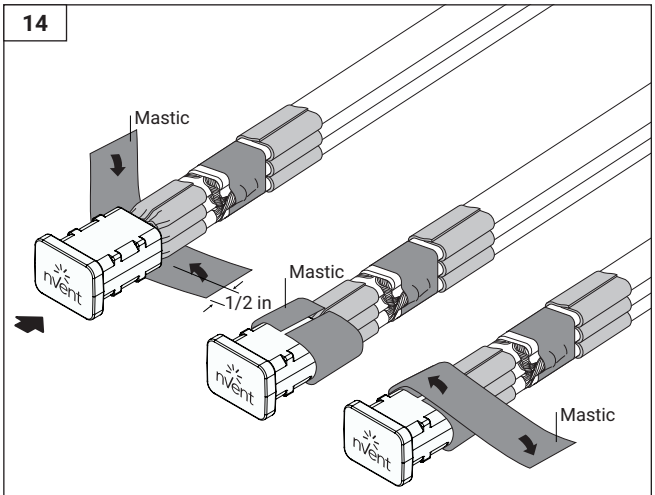

- First check that there are no cracks or damage to end plug. Slide end plug over bus wire crimps all the way and push firmly toward mastic.
- Wrap one piece of mastic around open end of end plug so half of width covers end of plug and half covers cables.
- Apply second piece of mastic like the first one to completely cover end of plug. Press mastic pieces together and into plug and wire mastic pieces.

15

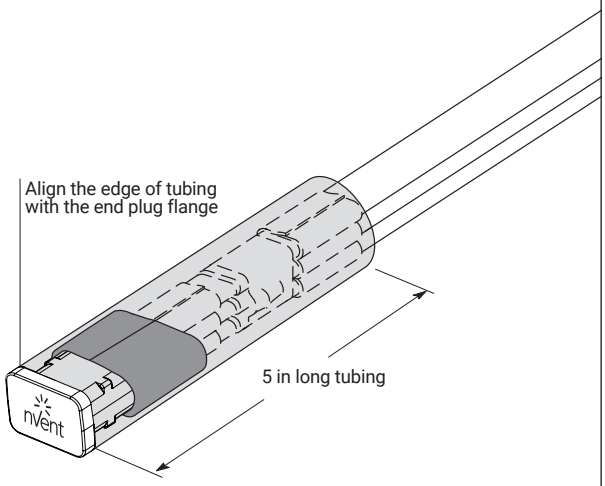

- Slide in the 5 inch heat shrink tube and align it with the flange of end plug, then start heating by a heat gun from the end plug toward the cables.

16

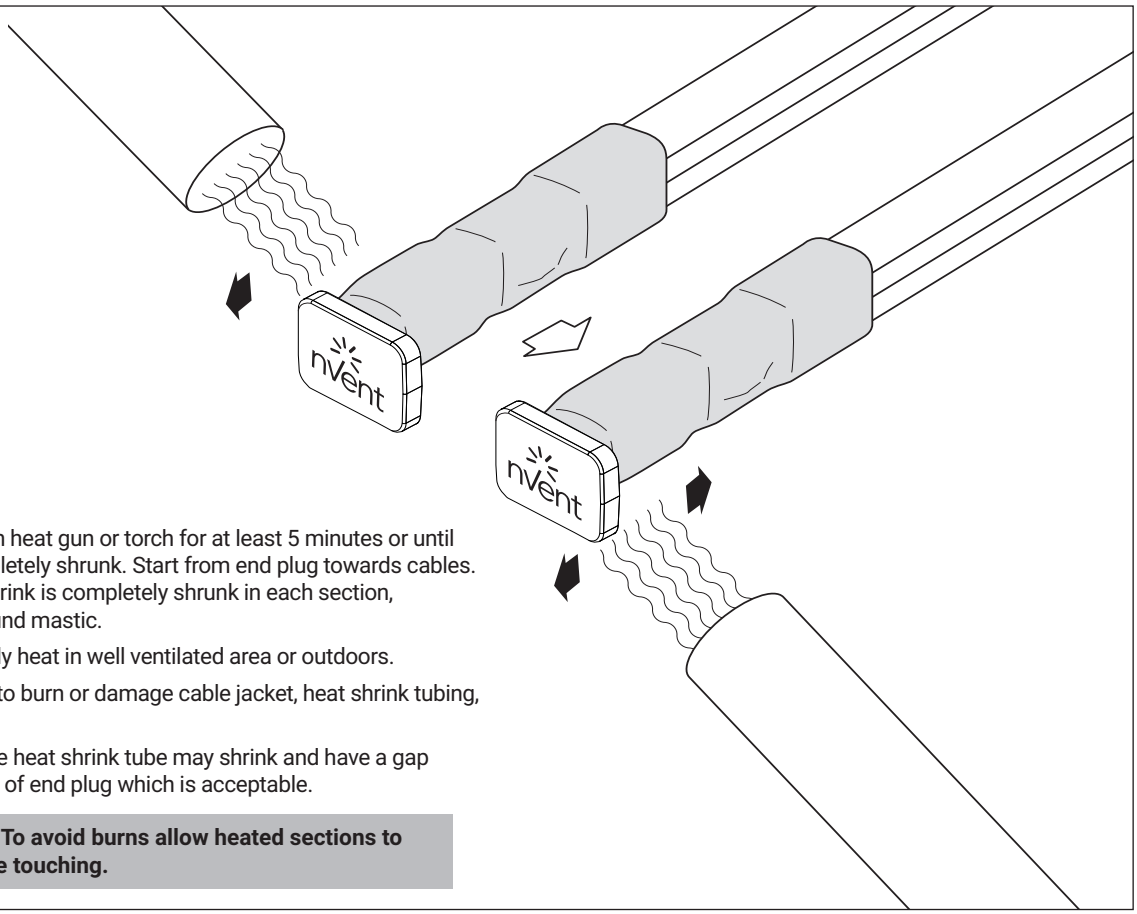

- Apply heat with heat gun or torch for at least 5 minutes or until tubing is completely shrunk. Start from end plug towards cables. Ensure heat shrink is completely shrunk in each section, especially around mastic.
- Preferably apply heat in well ventilated area or outdoors.
- Be careful not to burn or damage cable jacket, heat shrink tubing, or end plug.
- The edge of the heat shrink tube may shrink and have a gap with the flange of end plug which is acceptable.

⚠ **CAUTION: To avoid burns allow heated sections to cool before touching.**

17A **For applications except IceStop in gutters and downspouts.**

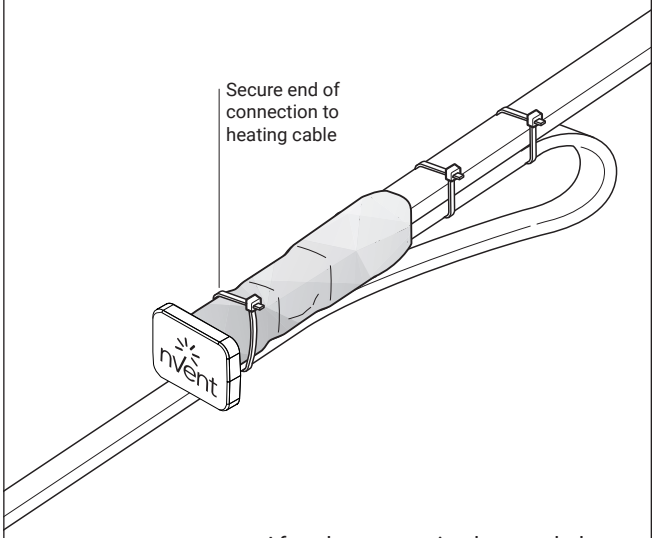

- After the connection has cooled, fold over the connection and fasten it with the third cable tie.

17B **IceStop gutter and downspout applications.**

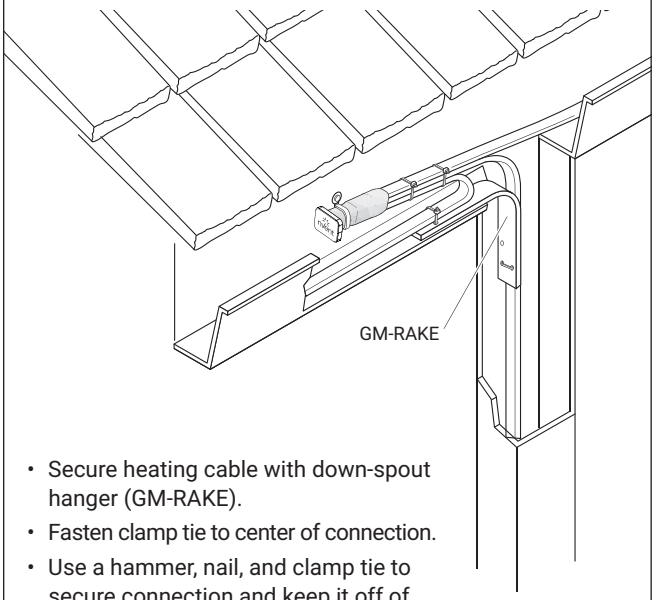

- Secure heating cable with down-spout hanger (GM-RAKE).
- Fasten clamp tie to center of connection.
- Use a hammer, nail, and clamp tie to secure connection and keep it off of the gutter bottom as shown.

⚠ **CAUTION: For cleaning, first disconnect the power, and cover the splice area before washing. Preferably avoid pressure washing on the splice area.**

17C **For RaySol splice applications in conduit.**

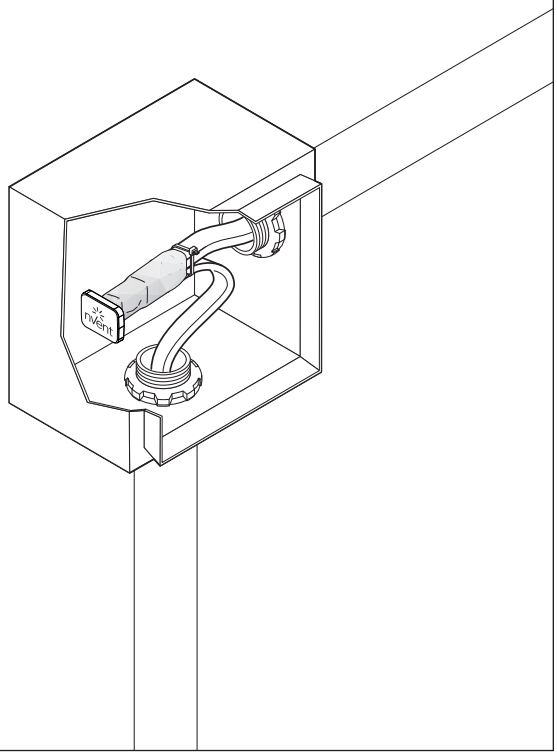

HEATING CABLE CONSTRUCTION

1 HWAT

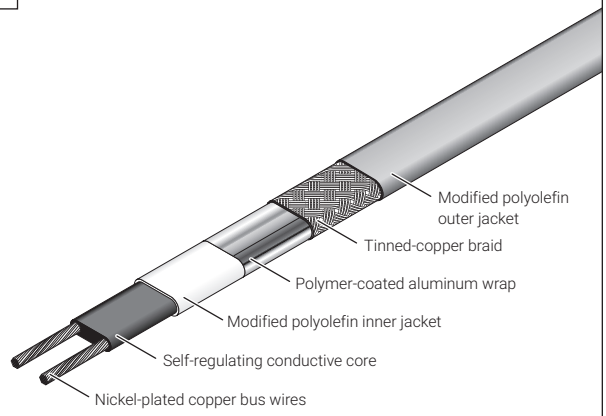

1A HWAT Splice

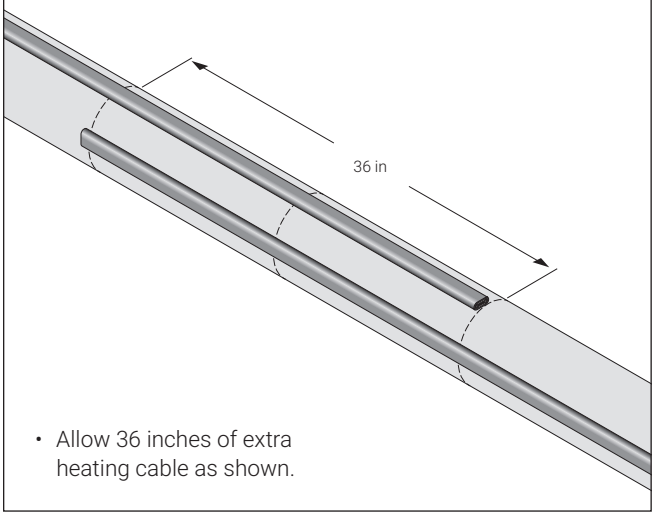

- Allow 36 inches of extra heating cable as shown.

1B HWAT Tee

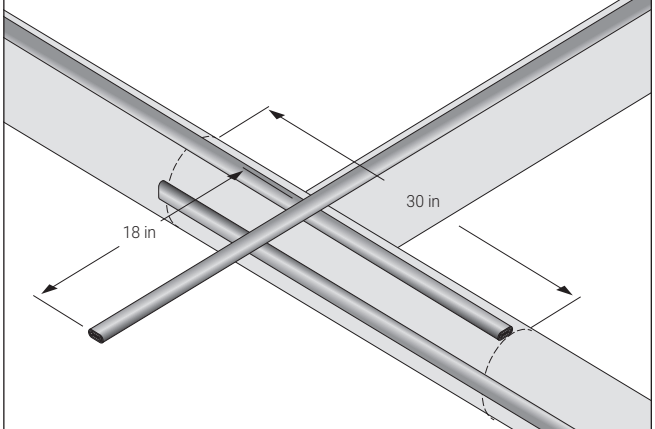

- Allow 48 inches of extra heating cable as shown.

2A HWAT Tee

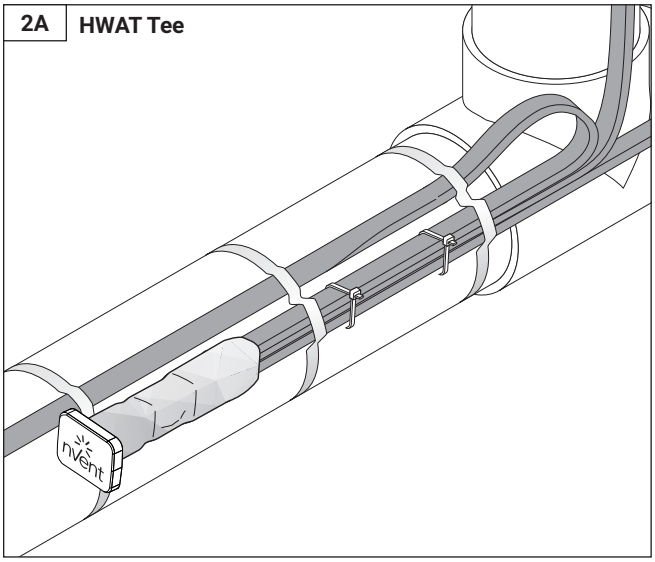

2B HWAT Splice

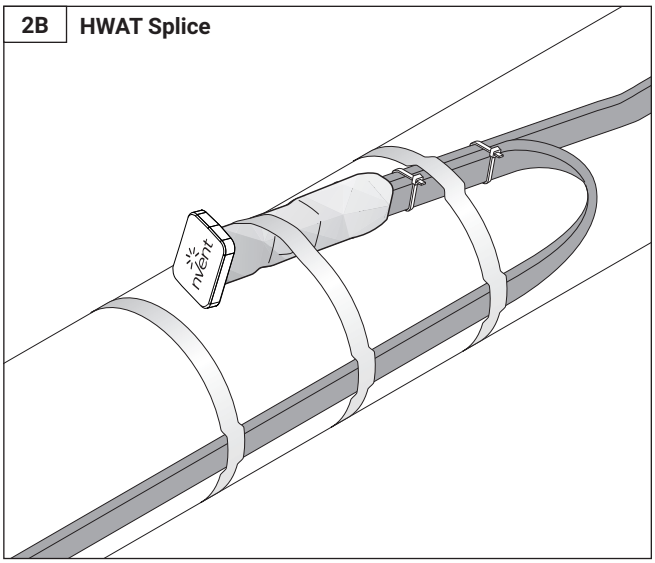

North America
Tel +1.800.545.6258
Fax +1.800.527.5703
thermal.info@nVent.com

Europe, Middle East, Africa
Tel +32.16.213.511
Fax +32.16.213.604
thermal.info@nVent.com

Asia Pacific
Tel +86.21.2412.1688
Fax +86.21.5426.3167
cn.thermal.info@nVent.com

Latin America
Tel +1.713.868.4800
Fax +1.713.868.2333
thermal.info@nVent.com

nVent.com/RAYCHEM

©2021 nVent. All nVent marks and logos are owned or licensed by nVent Services GmbH or its affiliates. All other trademarks are the property of their respective owners.
nVent reserves the right to change specifications without notice.

RAYCHEM-IM-H54592-FTCHSTPLUS-EN-2111

P000004434