C910-485 Heat Trace Controller

INSTALLATION, OPERATION AND MAINTENANCE MANUAL

Firmware versions up to V4.0X

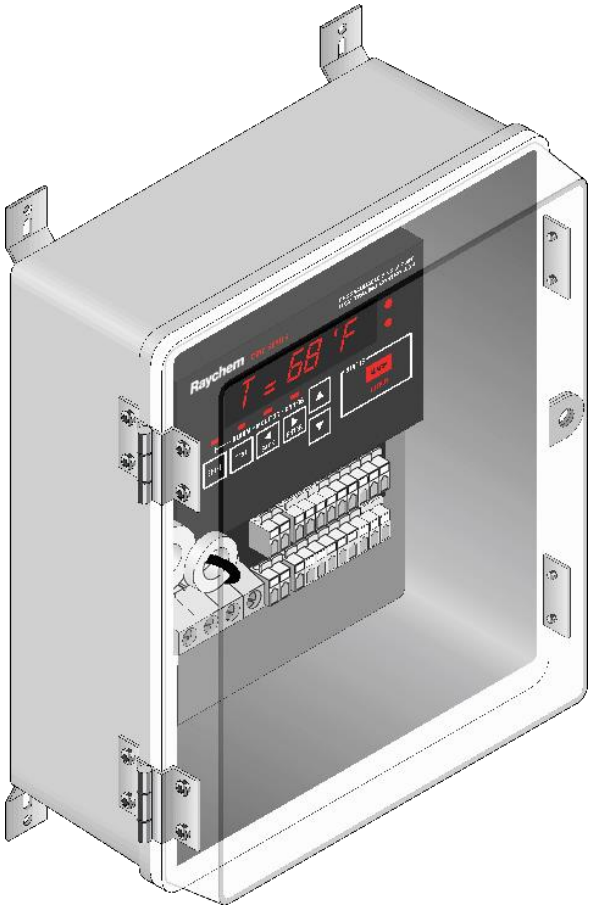

CONTENTS

Section 1 Overview **3**
1.1 Introduction 3
1.2 Product Overview 3
1.2.1 Description 3
1.2.2 Features 3
1.3 Product Specification 5

Section 2 Installation and Wiring **8**
2.1 Introduction 8
2.2 Initial Inspection 8
2.3 Installation Location 8
2.4 Mounting Procedures 8
2.5 Wiring 9
2.5.1 Power Connections 9
2.5.2 Temperature Sensor and Extension Cables 10
2.5.3 External Device Control/Override 10
2.6 Alarm Relay Connections 10
2.6.1 Communication Signal Connections 12
2.7 Initializing the Controller 12
2.7.1 Initial Heating Cable Test 12

Section 3 Operator Console **13**
3.1 Alphanumeric Display 13
3.2 Keypad 13
3.3 LED Indicators 14

Section 4 C910-485 Operation **15**
4.1 Operating Modes 15
4.1.1 Four Modes of Console 15
4.2 Console Mode Menus 17
4.2.1 Alphanumeric Tag Assignment 18
4.2.2 Setting Units 19
4.2.3 Switch Control Mode 20
4.2.4 Control Setpoint 21
4.2.5 Deadband 22
4.2.6 Proportional Ambient Sensing Control (PASC) 23
4.2.7 Low Temperature Alarm: Enable (Lo TS 1 and Lo TS 2) 24
4.2.8 Low Temperature Alarm: Setting (Lo TS 1 and Lo TS 2) 25
4.2.9 High Temperature Alarm: Enable (Hi TS 1 and Hi TS 2) 26
4.2.10 High Temperature Alarm: Setting (Hi TS 1 and Hi TS 2) 27
4.2.11 Temperature Sensor Failure Alarm 28
4.2.12 High Temperature Cut-out, Setpoint and Alarm (HI Limit TS1/HI limitTS2) 29
4.2.13 Low Load Current Alarm: Enable (Lo Load) 30
4.2.14 Low Load Current Alarm: Setting (Lo Load) 31
4.2.15 Factory Default Settings (Load Defaults) 32
4.2.16 Ground-fault Current Alarm level (Hi GF Alarm) 33
4.2.17 Ground-fault Current Trip Level (Hi GF Trip) 34
4.2.18 Temperature Sensor Failure Mode 35
4.2.19 Temperature Sensor Control Mode (TS CLT Mode) 36
4.2.20 External Input: Inhibit or Force on. 37
4.2.21 Firmware Version 38
4.2.22 Passcode 39
4.2.23 Communications Setup 40
4.2.24 Auto-Cycle: Enabling 42
4.2.25 Auto-Cycle: Interval 43
4.2.26 Auto-Cycle: Units 44
4.2.27 Contactor Count 45
4.2.28 Monitor and Maintenance Menus 46
4.2.29 Acknowledging and Resetting Alarms 48
4.2.30 Alarm Output Normal State 49

Section 5 Troubleshooting **50**

Section 6 Appendix A: Proportional Ambient Sensing Control (PASC) **52**

Section 6 Appendix B: C910-485 Wiring Diagram to the Fire Alarm Panel **53**

1.1 INTRODUCTION

This manual provides information pertaining to the installation, operation, testing and maintenance of the nVent RAYCHEM C910-485 Heat Trace Controller.

Additional copies of this user manual may be ordered separately through your nVent representative or online at **nVentthermal.com**

This document covers the C910-485 Heat Trace Controller and its available options. To ensure that you are using the correct documentation for your particular version of controller, please check the firmware version number of your C910-485 against the version number listed on the front of this manual. This may be displayed using the operator console or a communicating device.

1.2 PRODUCT OVERVIEW

1.2.1 Description

The C910-485 Electronic Heat Trace Controller controls, monitors, and communicates alarms and data for one heating cable circuit. It comes with a RS-485 communication module for remote operation over Modbus® protocol or in conjunction with the nVent RAYCHEM ACS-30 control system, if desired.

1.2.2 Features

A detailed description of available features may be found in Section 4 of this manual.

Highlights of specific features follow:

Keypad and Alphanumeric Display

A six character alphanumeric LED display provides the operator with large easy to read messages and prompts, eliminating complex and cryptic programming. Six individual keys are provided to quickly access alarming and operational information.

–40°F to 140°F (–40°C to 60°C) Operation

Extended temperature operation permits installation in all but the harshest environments.

Single or Dual Temperature Sensor Inputs

The ability to utilize one or two temperature sensor (TS) inputs allows the selection of one of eight control modes and programming of all temperature parameters.

High and Low Temperature Alarms

High and low temperature alarms are offered for both temperature sensor inputs of each control point.

High Temperature Cut-out

High temperature cut-out is provided for both temperature sensor inputs.

Low Current Alarms

The C910-485 offers adjustment of the low alarm points over the entire current measurement range.

Electromechanical Relay (EMR) Output

The C910-485 is equipped with a 30-A rated electromechanical relay (EMR) output switch with device failure alarm.

Ground-fault Alarm and Trip

Ground-fault (GF) current levels are monitored and are displayed in milliamperes. The adjustable ground-fault level gives the user the choice of both alarm and trip levels suitable for the particular installation.

Proportional Ambient Sensing Control (PASC)

The C910-485 includes the Proportional Ambient Sensing Control (PASC) mode to maximize the energy efficiency of the heat tracing system.

Minimum/Maximum Temperature Tracking

The controller maintains the minimum and maximum temperature values measured since the last reset of these values.

Temperature Alarms

The controller alarms on user selectable low and high temperature limits.

Auto-cycling

The controller will momentarily energize the circuit (for 10 seconds) at a programmable interval in order to test the heat tracing circuit during periods of non-use. This feature will detect issues with the heat-tracing circuit before it can lead to system damage.

Temperature Sensor Failure Alarm

Both open and shorted sensors are detected and alarmed by the controller.

Full Digital Communications

The C910-485 incorporates RS-485 serial communication for applications requiring direct interfacing to BMS systems using Modbus protocol or used as a single circuit extension to the ACS-30 control system.

Certification

nVent certifies that this product met its published specifications at the time of shipment from the factory.

Limited Warranty

This nVent product is warranted against defects in material and workmanship for a period of 18 months from the date of installation or 24 months from the date of purchase, whichever occurs first. During the warranty period, nVent will, at its option, either repair or replace products that prove to be defective. For warranty service or repair, this product must be returned to a service facility designated by nVent. The Buyer shall prepay shipping charges to nVent and nVent shall pay shipping charges to return the product to the Buyer. However, the Buyer shall pay all shipping charges, duties, and taxes for products returned to nVent from another country. nVent warrants that the software and firmware designated by nVent for use with the C910-485 Controller will execute its programming instructions properly. nVent does not warrant that the operation of the hardware, or software, or firmware will be uninterrupted or error-free.

Warranty Exclusion/Disclaimer

The foregoing warranty shall not apply to defects resulting from improper or inadequate maintenance by the Buyer, Buyer-supplied software or interfacing, unauthorized modification or misuse, operation outside of the specifications for the product, or improper installation. No other warranty is expressed or implied. nVent disclaims the implied warranties of merchantability and fitness for a particular purpose.

Exclusive Remedies

The remedies provided herein are the buyer’s sole and exclusive remedies. nVent shall not be liable for any direct, indirect, special, incidental, or consequential damages, whether based on contract, tort, or any other legal theory.

Conducted and Radiated Emissions—FCC/DOC Statement of Compliance

This equipment has been tested and found to comply with the limits for a Class A digital device, pursuant to Part 15 of the FCC rules. These limits are designed to provide reasonable protection against harmful interference when the equipment is operated in a commercial environment. This equipment generates, uses, and can radiate radio frequency energy and, if not installed and used in accordance with the instruction manual, may cause harmful interference to radio communications. Operation of this equipment in a residential area is likely to cause harmful interference, in which case the user will be required to correct the interference at their expense. This equipment does not exceed Class A limits for radio emissions as set out in Schedule V to VIII of the Radio Interference Regulations of Communication Canada.

1.3 PRODUCT SPECIFICATION

General	
Area of use	Nonhazardous locations
Approvals	**Nonhazardous locations** C US
Supply voltage	100 V to 277 V, +5/−10%, 50/60 Hz Common supply for controller and heat-tracing circuit

Enclosure	
Protection	NEMA 4X
Materials	FRP/Polycarbonate
Ambient operating temperature range	−40°F to 140°F (−40°C to 60°C)
Ambient storage temperature range	−40°F to 185°F (−40°C to 85°C)
Relative humidity	0% to 90%, noncondensing

Control	
Relay type	Double-pole, mechanical
Voltage, maximum	277 V nominal, 50/60 Hz
Current, maximum	30 A @ 104°F (40°C) derated to 20 A @ 140°F (60°C)
Control algorithms	EMR: On/off, proportional ambient sensing control (PASC)
Control range	0°F to 200°F (−18°C to 93°C)

Monitoring		
Temperature	Low alarm range	0°F to 180°F (−18°C to 82°C) or OFF
	High alarm range	0°F to 200°F (−18°C to 93°C) or OFF
Ground fault	Alarm range	20 mA to 100 mA
	Trip range	20 mA to 100 mA

Current	Low alarm range 0.3 A to 30 A or OFF
Autocycle	Diagnostic test interval adjustable from 1 to 240 minutes or 1 to 240 hours

Temperature Sensor Inputs	
Quantity	Two inputs standard
Types	100 Ω platinum RTD, 3-wire, α= 0.00385 ohms/ohm/°C Can be extended with a 3-conductor shielded cable of 20 Ω maximum per conductor

Alarm Outputs	
AC relay	Isolated solid-state triac, SPST, 0.75 A maximum, 100 V to 277 V nominal
Dry contact relay	Pilot duty only, 48 V/dc, 500 mA maximum, 10 VA maximum resistive switching
Note: Outputs are configurable as “open on alarm” or “close on alarm”	

Programming and Setting	
Method	Programmable keypad, or ACS-30 user interface network
Units	Imperial (°F, in.) or Metric (°C, mm)
Digital display	Actual temperature, control temperature, heating cable current, ground fault, programming parameter values, alarm values
LEDs	Current mode, heating cable on, alarm condition, receive/transmit data
Memory	Nonvolatile, restored after power loss, checksum data checking
Stored parameters (measured)	Minimum and maximum temperature, maximum ground-fault current, maximum heating cable current, contactor cycle count, time in use
Alarm conditions	Low/high temperature, low current Ground-fault alarm, trip RTD failure, loss of programmed values, or EMR failure
Other	Password protection

Connection Terminals	
Power supply input	Screw terminals, 22–8 AWG
Heating cable output	Screw terminals, 22–8 AWG
Ground	Two box lugs, 14–6 AWG
RTD/alarm/communications	28–12 AWG spring clamp terminals

Mounting	
FRP/Poly carbonate enclosure	Surface mounting with four fixing holes on 7.25 in x 11.7 in (184 mm x 297 mm) centers Hole diameter: 0.31 in (8 mm)

Communications	
Protocol	Modbus RTU / ASCII
Topology	Multidrop, daisy chain
Cable	Single shielded twisted pair, 26 AWG or larger
Length	4,000 ft. (1.3 km) maximum @ 9600 baud
Quantity	Up to 32 devices without repeater
Address	Programmable

2.1 INTRODUCTION

This section includes information regarding the initial inspection, preparation for use, and storage instructions for the C910-485 Heat Trace controllers.

2.2 INITIAL INSPECTION

Inspect the shipping container for damage. If the shipping container or cushioning material is damaged, it should be kept until the contents of the shipment have been verified and the equipment has been checked mechanically and electrically. If the shipment is incomplete, there is mechanical damage, a defect, or the controller does not pass the electrical performance tests, notify the nearest nVent representative. If the shipping container is damaged, or the cushioning material shows signs of stress, notify the carrier as well as your nVent representative. Keep the shipping materials for the carrier's inspection.

2.3 INSTALLATION LOCATION

The wide ambient operating temperature range of the controller permits installation in most locations. Considerations should include accessibility for maintenance and testing and the location of existing conduits.

2.4 MOUNTING PROCEDURES

The mounting template is shown in Figure 2.1.

Drill conduit entry holes prior to mounting. Conduit entries should be made in the bottom of the enclosure if possible to reduce the possibility of water entry from condensation or leakage. Conduit entries must be drilled or punched using standard industry practices. Use bushings suitable for the environment and install such that the completed installation remains waterproof. Grounding hubs and conductors must be installed in accordance with Article 250 of the National Electrical Code and Part I of the Canadian Electrical Code.

Figure 2.1 – Mounting Hole Template

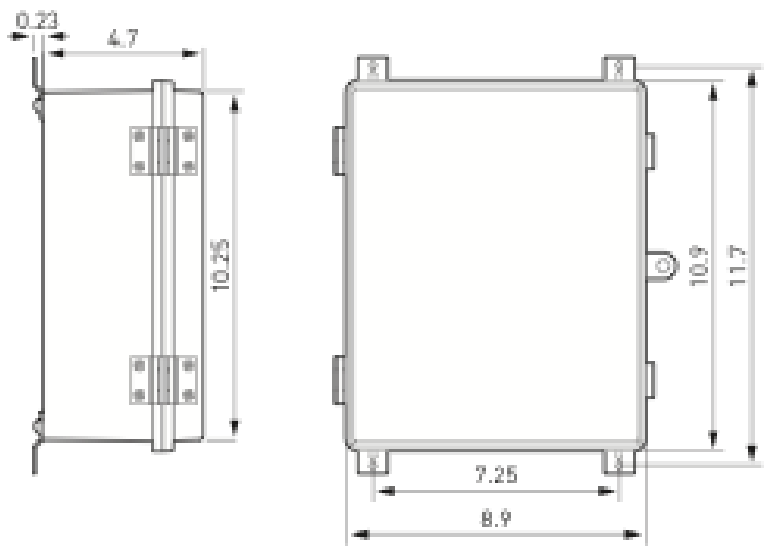

2.5 WIRING

The following drawings provide sample wiring diagrams for the C910-485 control products and optional accessories. Refer to Figure 2.2 for wiring terminal locations. Please contact your local nVent representative for information regarding other available options.

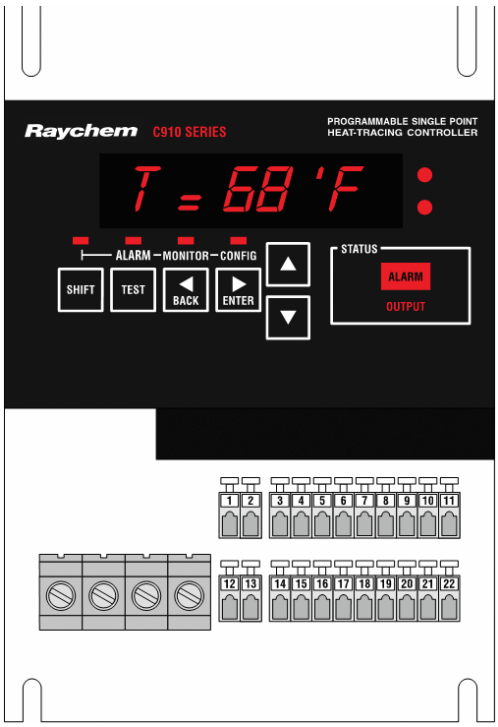

Figure 2.2 – Power Connection

2.5.1 Power Connections

The C910-485 controller may be powered directly from a 100 V to 277 V supply.

All of the power terminals are labeled for easy identification. Do not attempt to use wire sizes that exceed the marked terminal ratings and avoid terminating two wires on the same terminal whenever possible.

Note: Make sure that power terminals are retightened several days after installation. Stranded wire will tend to compress when initially installed; therefore, these terminals should be checked for tightness several times after the system is installed to ensure that a good connection is maintained.

Note: Follow the industry standard grounding practices. Do not rely on conduit connections to provide a suitable ground. Grounding terminals/screws are provided for connection of system ground leads.

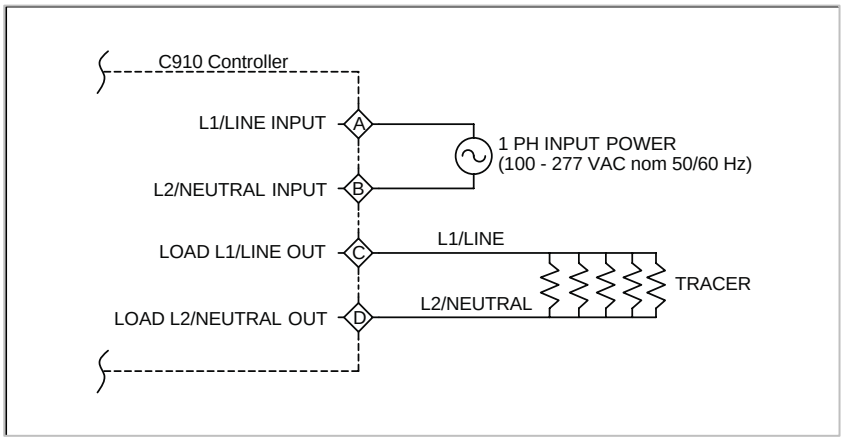

Figure 2.3 – Power Connection

2.5.2 Temperature Sensor and Extension Cables

The C910-485 has two (2) RTD inputs. Use only 3-wire 100 Ω Platinum RTDs (DIN 43760, α= 0.00385 Ω/ Ω/°C)

Note: The C910-485 default is set for one RTD in position one. If a second RTD is installed in position two, the controller must be power cycled to recognize the RTD.

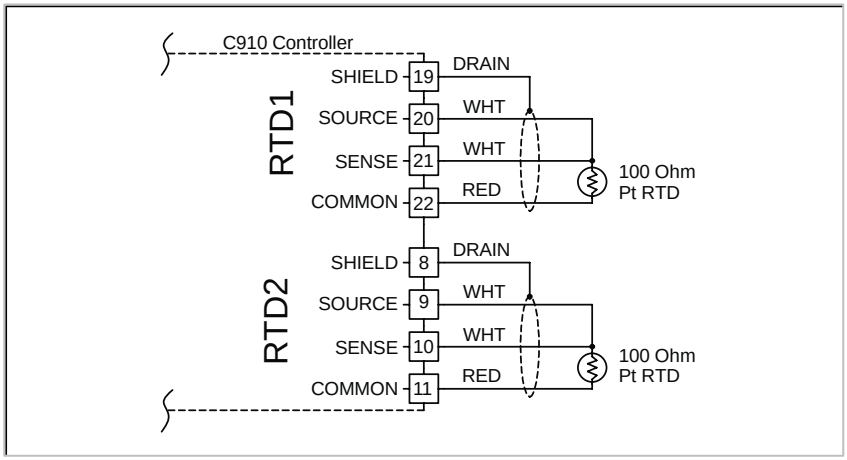

Figure 2.4 – Temperature Sensor Wiring

Use shielded, twisted, three-conductor wire for the extension of RTD leads. The wire size should ensure that the maximum allowable lead resistance is not exceeded (20 Ω/lead). RTD wiring should be grounded at the controller end only, using the terminals provided.

2.5.3 External Device Control/Override

The C910-485 controller can be forced on or off using an external device with a dry contact.

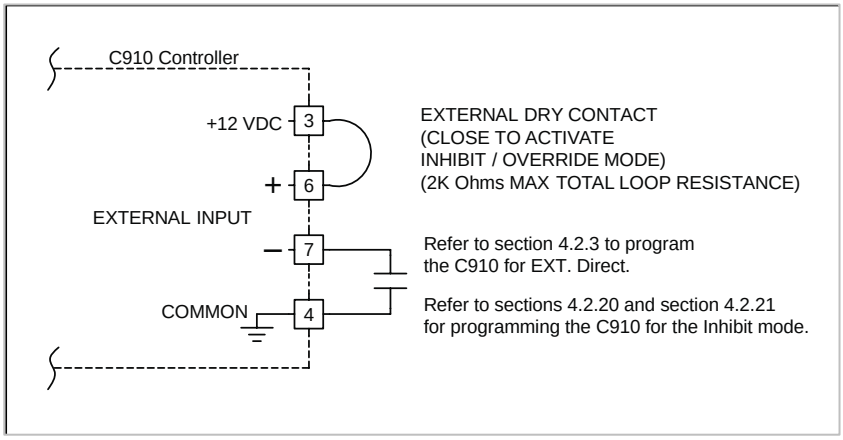

Figure 2.5 – Wiring for External Device Control/Override

2.6 ALARM RELAY CONNECTIONS

Two types of alarm relays are provided: One is a DC contact and can be connected as dry contact (Fig. 2.6) or as a 12 Vdc contact (Figure 2.7). The second is an AC relay (triac) and can be connected as an alarm relay (Figure 2.8) or a powered alarm relay (Figure 2.9). Both may be programmed for normally open (N.O.) or normally closed (N.C.) operation. Please refer to Appendix B for wiring diagram to the fire alarm panel in the fire sprinkler pipe freeze application.

Note: Both alarm relays are controlled by the C910-485 using the same signal.

Note: The dry contact alarm relay is intended to be used for switching low-voltage, low-current signals. Do not use this relay to directly switch line voltages.

Alarm Output Wiring

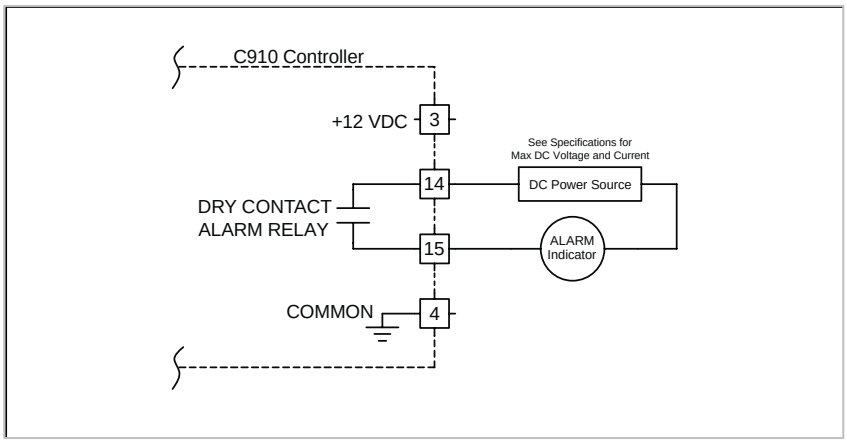

Figure 2.6 – Used As a Dry Contact

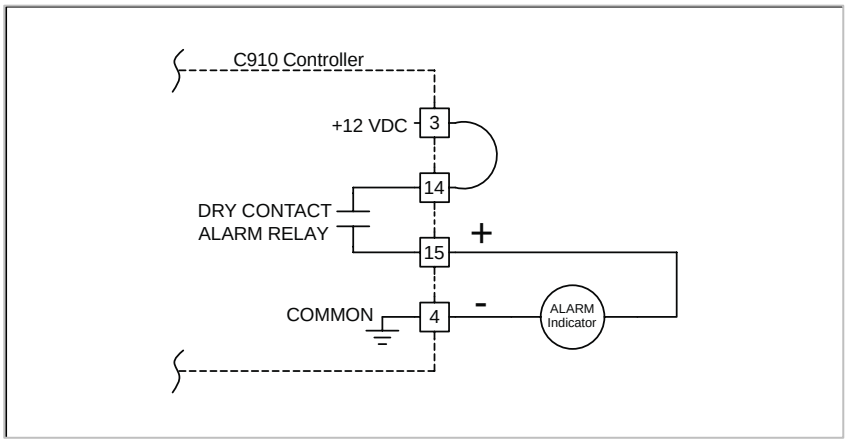

Figure 2.7 – Used As a Switched DC Contact

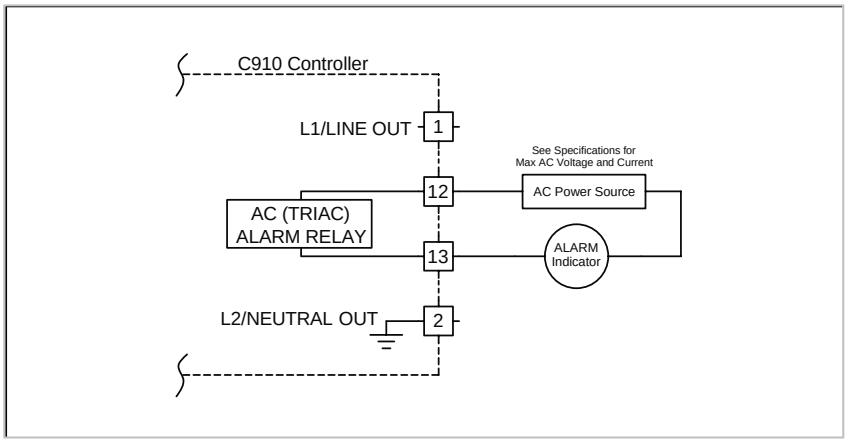

Figure 2.8 – Used As an AC Alarm Relay

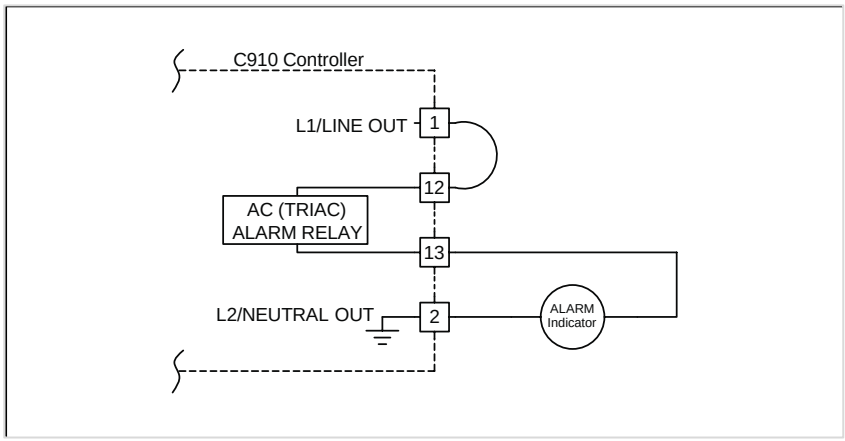

Figure 2.9 – Used as a Powered AC Alarm Relay

2.6.1 Communication Signal Connections

The C910-485 controller includes a RS-485 communications interface. Use twisted pair, shielded cable communication wiring. Ground the shield on communications wiring at one end only, using the terminals provided.

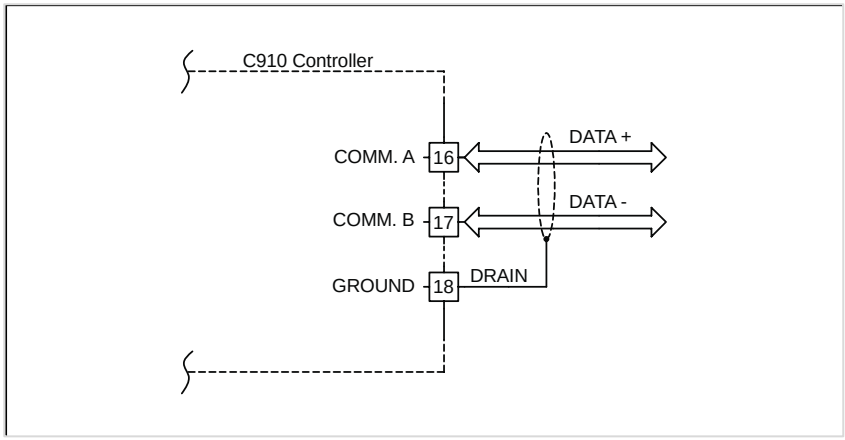

Figure 2.10 – Communication Wiring (C910-485 only) RS-485 (2-Wire) Connections

2.7 INITIALIZING THE CONTROLLER

2.7.1 Initial Heating Cable Test

To minimize the risk of damage to the controller due to a heating cable fault, the integrity of the heating cable should be verified by performing the commissioning tests detailed in the appropriate product installation and operating manual. These manuals can be found on nVentthermal.com

These tests must be performed with the controller output disconnected. Once the cable has been checked, it may be reconnected to the controller and power applied.

3.1 ALPHANUMERIC DISPLAY

The console incorporates a six characters, fourteen segment, plus decimal LED display.

Messages and prompts that are greater than six characters long are scrolled, allowing more meaningful, non-cryptic messages to be used.

3.2 KEYPAD

The local keypad consists of six keys that allow you to select the console mode function that you are interested in. For certain keys, the SHIFT key selects an alternate function, as shown by the text above that key. When connected to the ACS-30 control system, the key pad is locked out and will display "Remote Control".

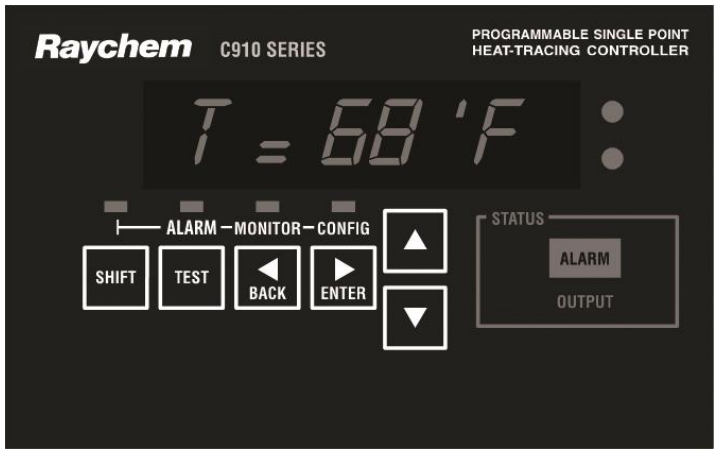

Figure 3.1 – Keypad

Key	Function
SHIFT	Press to activate a shifted function; the next key pressed uses the alternate (shifted) function (ALARM, MONITOR and CONFIG). The SHIFT LED illuminates, indicating the next key uses the alternate (shifted) function. Pressing SHIFT again cancels the alternate (shifted) function.
TEST	Turns on heating cable circuit for 30 seconds. SHIFT + TEST Switches the console to the Alarm/reset mode.
BACK	Exits the current menu (or cancels the new setting when editing a parameter) Moves the cursor to the left when editing an alphanumeric parameter. [SHIFT + MONITOR] Switches the console to the Monitor mode.
ENTER	Selects the item in the display (or accepts the setting when editing a parameter). Moves the cursor to the right when editing an alphanumeric parameter. [shift + CONFIG] Switches the console to the CONFIG mode. Moves to the previous item in a menu. Increments the value when editing. Moves to the next item in a menu. Decrements the value when editing.
Up/Down Arrow Keys	Once the main menu has been entered, use the Up/down arrow keys to navigate the program options.

3.3 LED INDICATORS

The console includes eight LED indicators:

Four LEDs indicate the console operating mode (**SHIFT**ed function, **ALARM**, **MONITOR**, or **CONFIG**ure modes).

Two status LEDs indicate the alarm and control output status of the controller:

The **OUTPUT** LED, when illuminated steadily, indicates that the output of the controller is turned on and is allowing current to flow into the heating cable circuit.

The **ALARM** LED will flash (approximately once per second) when the controller has detected an alarm condition.

Two additional LEDs are used to indicate external communications activity and are only used with the C910-485 with the optional RS-485 communications interface.

The "**Rx**" LED flashes to show that the Controller is receiving information via its communications port.

The "**Tx**" LED flashes when the Controller is transmitting information via its communications port.

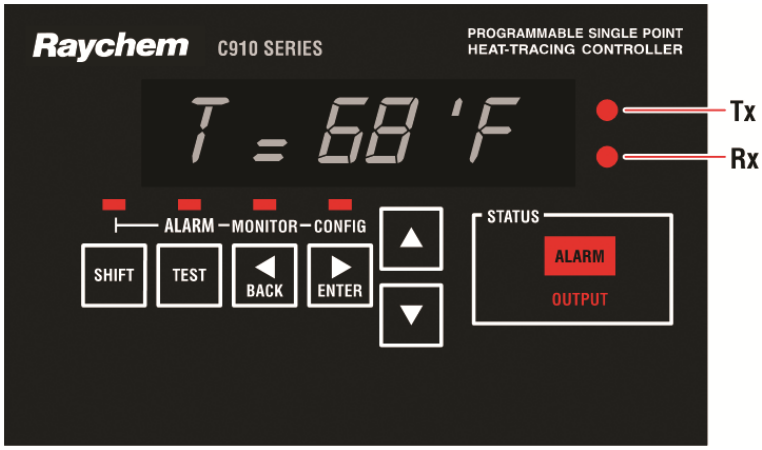

Figure 3.2 – Operator Console

4.1 OPERATING MODES

4.1.1 Four Modes on Console

Scan

This is the default mode displayed during normal operation. In this mode, the console sequentially displays load current, temperature, and setpoint readings.

Alarm

This mode allows you to examine or reset any alarms that may exist. The LED above the ALARM key is illuminated while in this mode. To enter this mode:

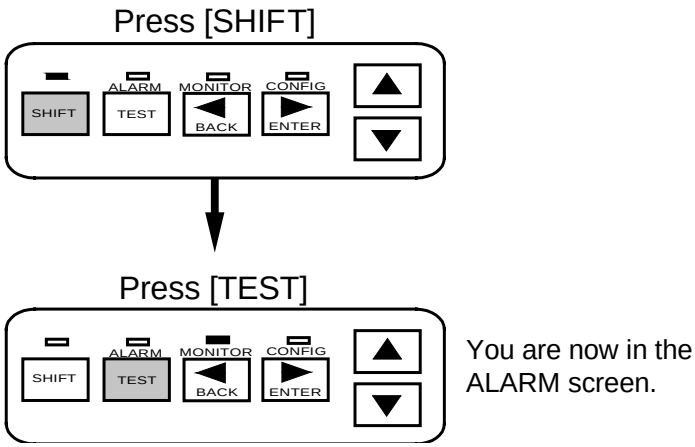

Monitor

This mode allows you to examine any of the controller readings such as temperature, load current, etc. The LED above the MONITOR key is illuminated while in this mode. To active this mode:

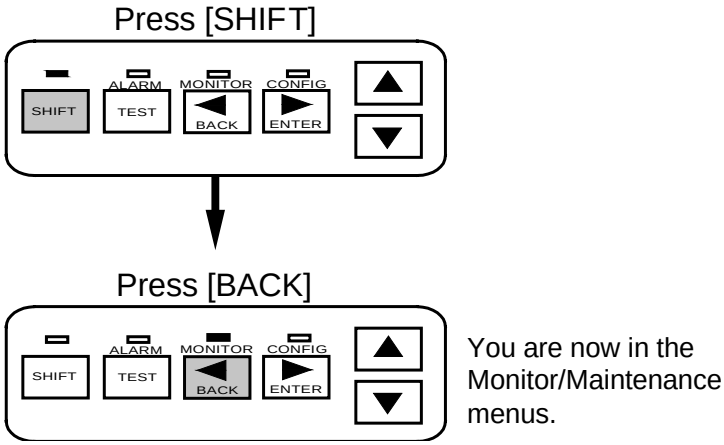

Configure

This mode allows you to access the console menus to examine or alter the settings. The LED above the CONFIG key is illuminated while in this mode. To access the operational menus:

Press [SHIFT]

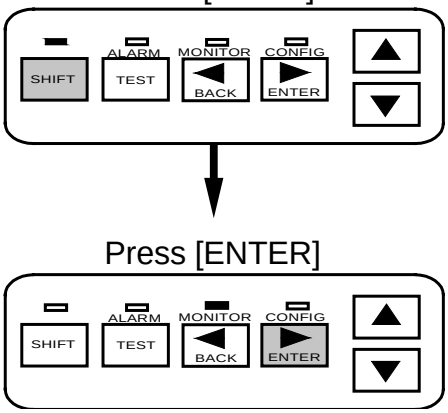

Press [ENTER]

You are now in the Console menus.

4.2 CONSOLE MODE MENUS

The Console Mode Menu Index below shows all user interface parameters. This menu shows the Factory Default along with the associated range. The section column refers to the section in this manual that illustrates the actual keystrokes required to input the parameters.

Menu #	Section	Menu			Defaults
1	4.2.1	Tag =			00261439
2	4.2.2	Units =			Imperial
3	4.2.3	Switch Control Mode			ON /OFF
4	4.2.4	Control Setpoint =			40'F
5	4.2.5	Deadband =			5'F
6	4.2.6	PASC Setup			…
7	4.2.7	LO TS 1 =	LO TS 2 =		DIS
8	4.2.8	LO TS 1 =	LO TS 2 =		35'F
9	4.2.9	HI TS 1 =	HI TS 2 =		DIS
10	4.2.10	HI TS 1 =	HI TS 2 =		180'F
11	4.2.11	TS 2 Fail =			DIS
12	4.2.12	TS 1 HI LIMIT = TS 1 HI LIMIT Setpoint = TS 1 HI LIMI Alarm =	TS 2 HI LIMIT = TS 2 HI LIMIT Setpoint = TS 2 HI LIMI Alarm =		DIS 200'F DIS
13	4.2.13	LO Load =			ENA
14	4.2.14	LO Load =			1.0 A
15	4.2.15	Load Defaults			No
16	4.2.16	HI GFI =			20 mA
17	4.2.17	GFI Trip =			30 mA
18	4.2.18	TS Fail Mode =			ON
19	4.2.19	TS CTL Mode =			TS 1 – FAIL ON
20	4.2.20	OVERRIDE Source = Ext. Input =			Remote Not Used
21	4.2.21	Version			V4.04.3
22	4.2.22	Passcode =			0
23	4.2.23	Communication Setup			HTCbus
24	4.2.24	Auto-Cycle =			DIS
25	4.2.25	Auto-Cycle Interval =			8
26	4.2.26	Auto-Cycle Units =			Hours
27	4.2.27	Contactor Count =			200000
28	4.2.28	Alarm Output =			N.C.
29	4.2.29	Acknowledging/Resetting Alarms			N/A
30	4.2.30	Alarm Output Normal State			Normally Closed

4.2.1 Alphanumeric Tag Assignment

Purpose	A 19 character alphanumeric TAG may be assigned to a control point to allow it to be easily associated with a pipe, vessel, process, circuit, drawing name, or number.
Setting	Any combination of 19 characters from A–Z, 0–9, /, -, ., (,), or #.

Keystrokes for Changing TAG

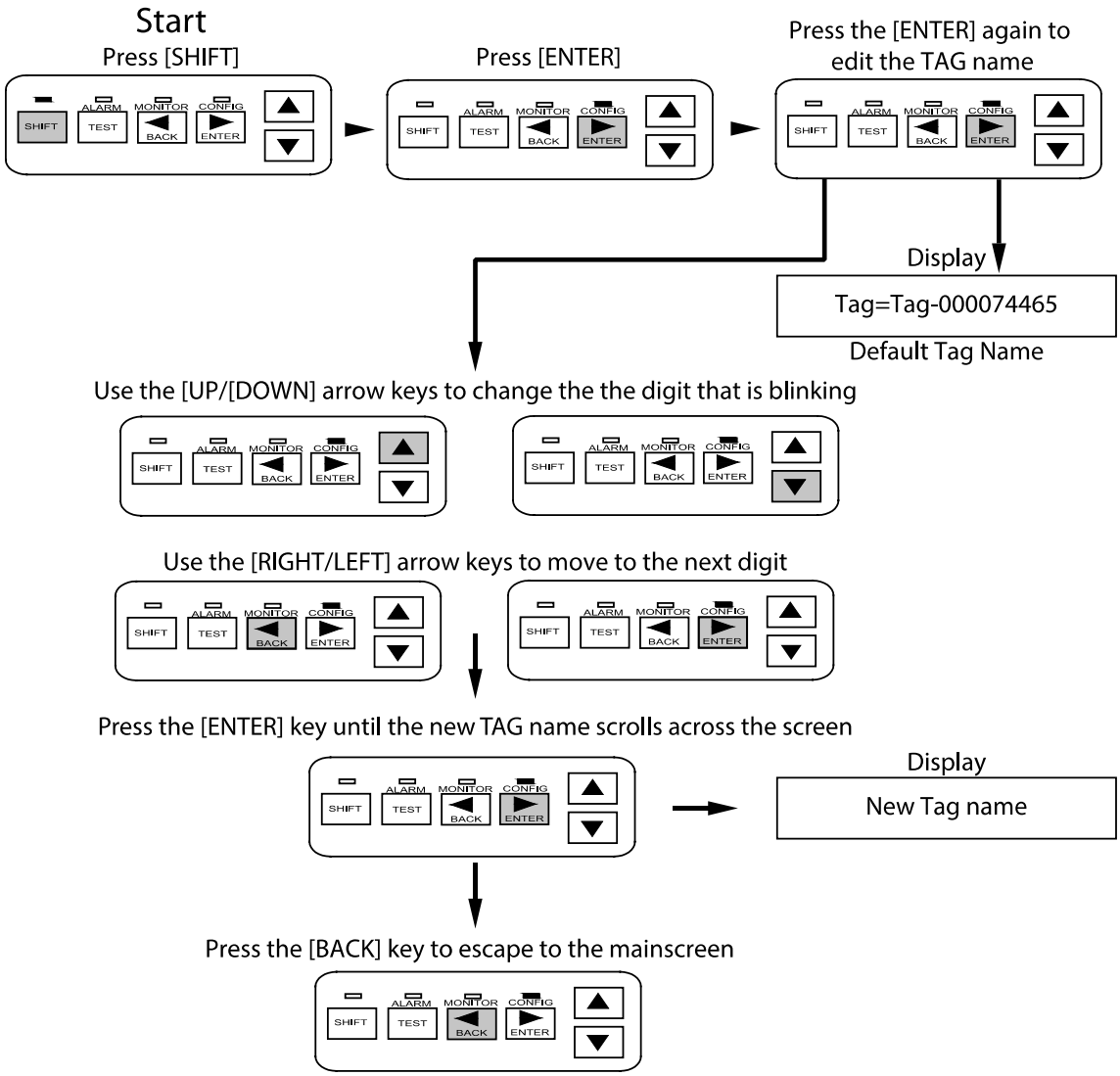

4.2.2 Setting Units

Purpose This allows selection of the type units (temperature or size) to display on the operator.

Setting	Metric or Imperial	**Factory Default**	Imperial

Keystrokes for Changing Units

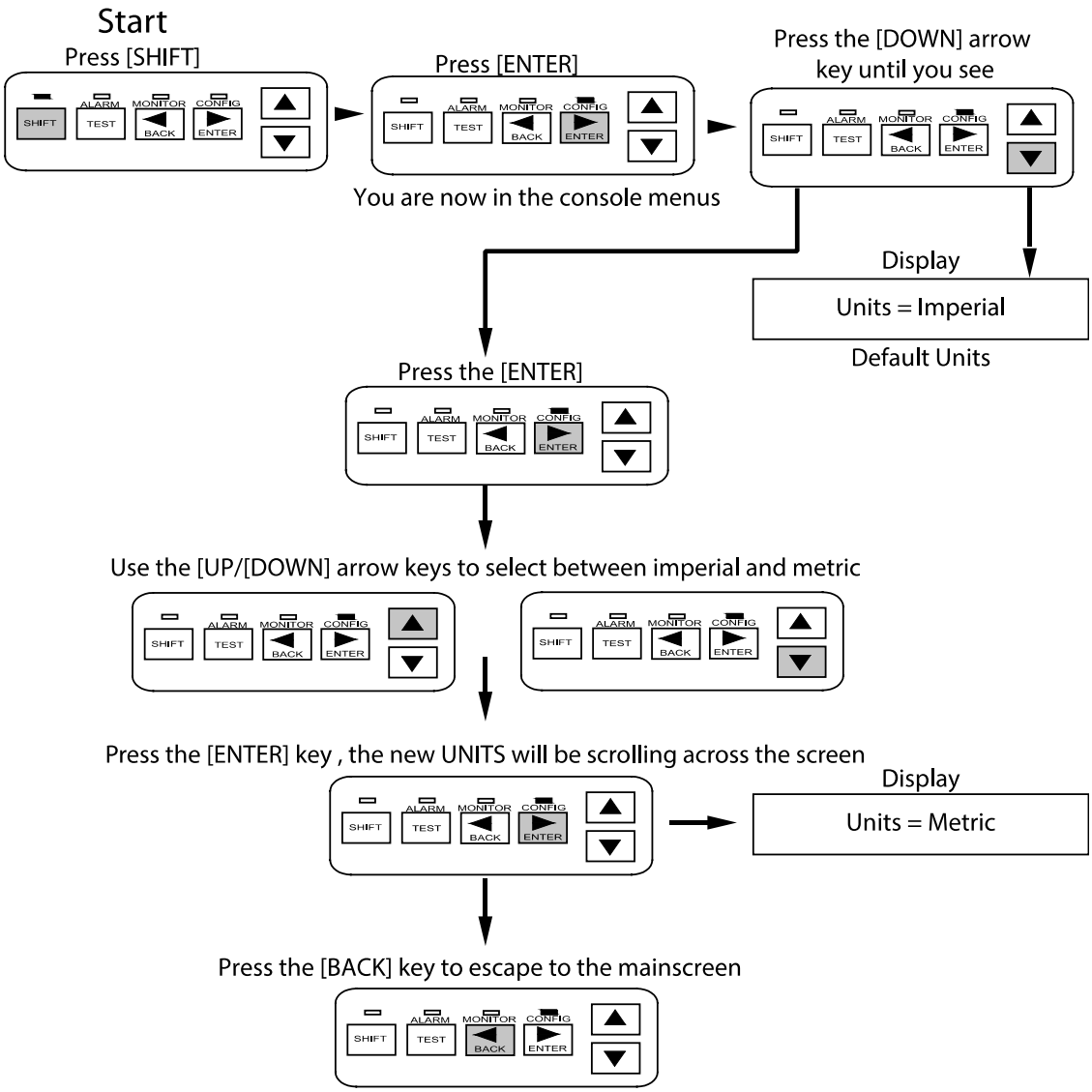

4.2.3 Switch Control Mode

Purpose This allows selection of the type of algorithm to be used to maintain the control setpoint temperature. Reference Figure 2.5 for the External Direct wiring schematic.)

Setting	On/Off or Proportional Ambient Sensing Control (PASC), External Direct	**Factory Default**	On/off

Keystrokes for changing Switch Control Mode

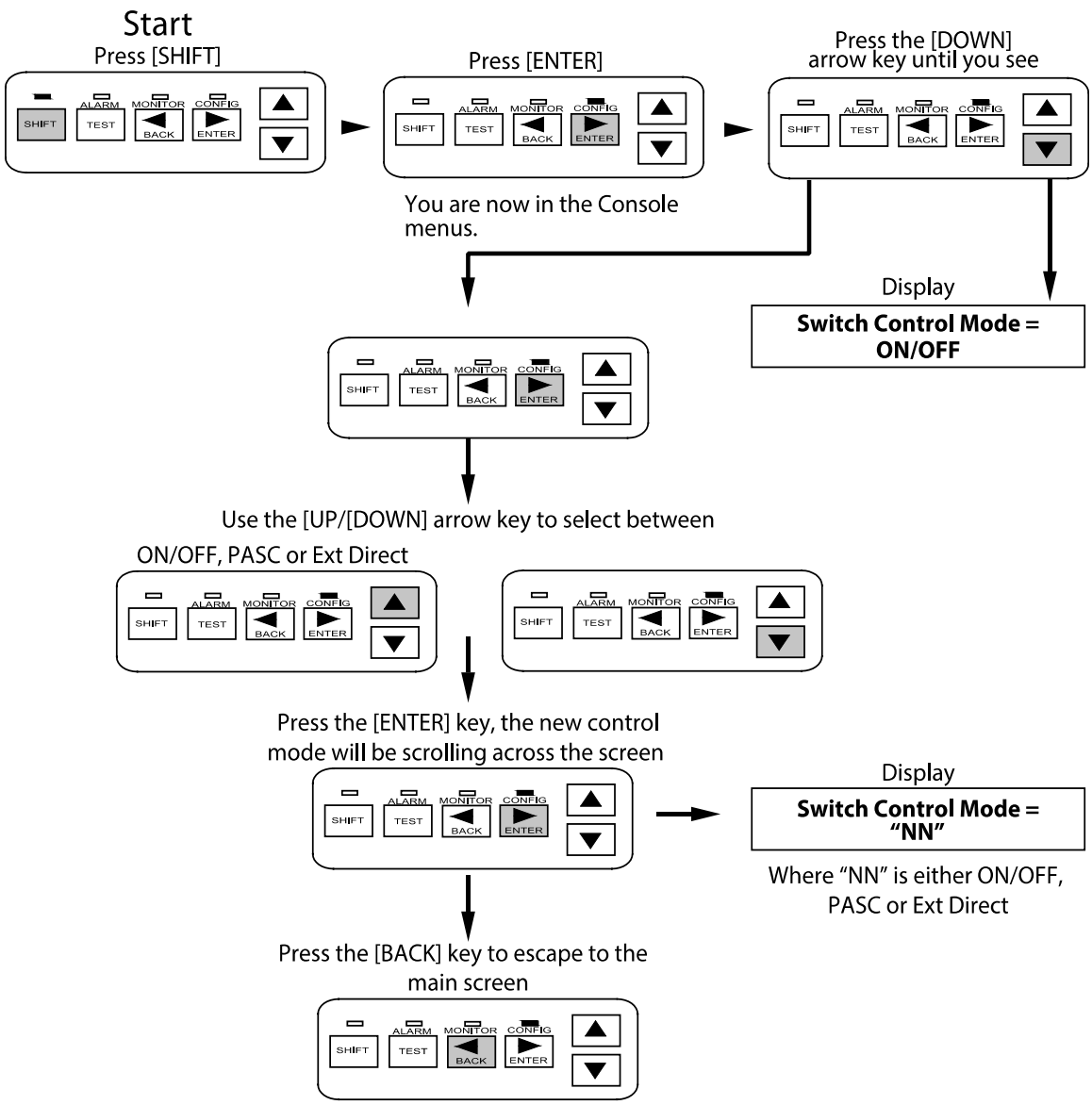

4.2.4 Control Setpoint

Purpose	This is the temperature that the controller uses to determine whether its output switch should be on or off.

Setting/Range	0°F to 200°F (−18°C to 93°C)	**Factory Default**	40°F (4°C)

Keystrokes for Changing the Control Setpoint

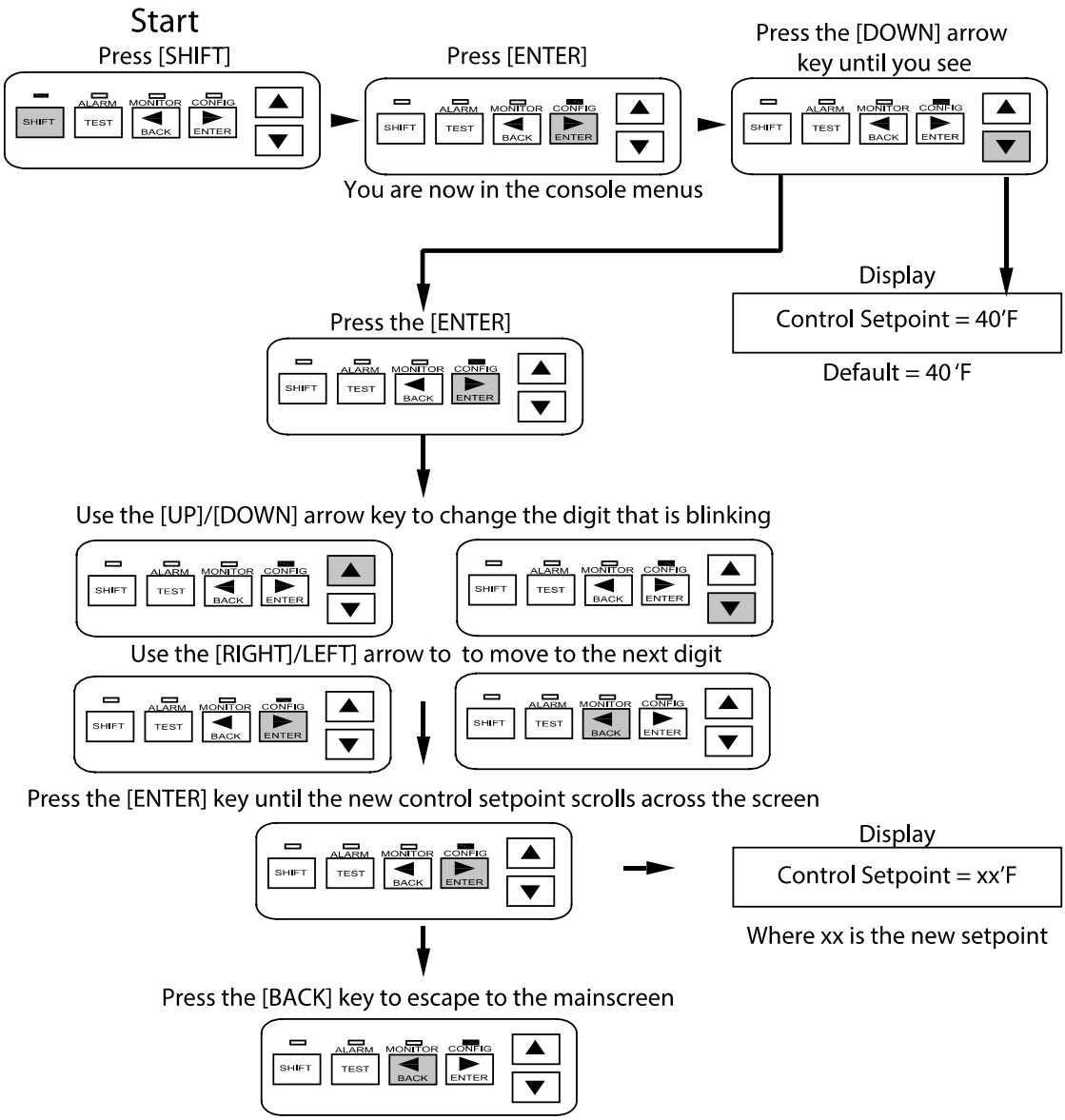

4.2.5 Deadband

Purpose	The deadband is a window of difference between the measured control temperature and the desired control setpoint temperature and provides the decision to turn the output off or on		
Setting/Range	1°F to 10°F (1°C to 6°C)	**Factory Default**	5°F (3°C)

Keystrokes for Changing Deadband

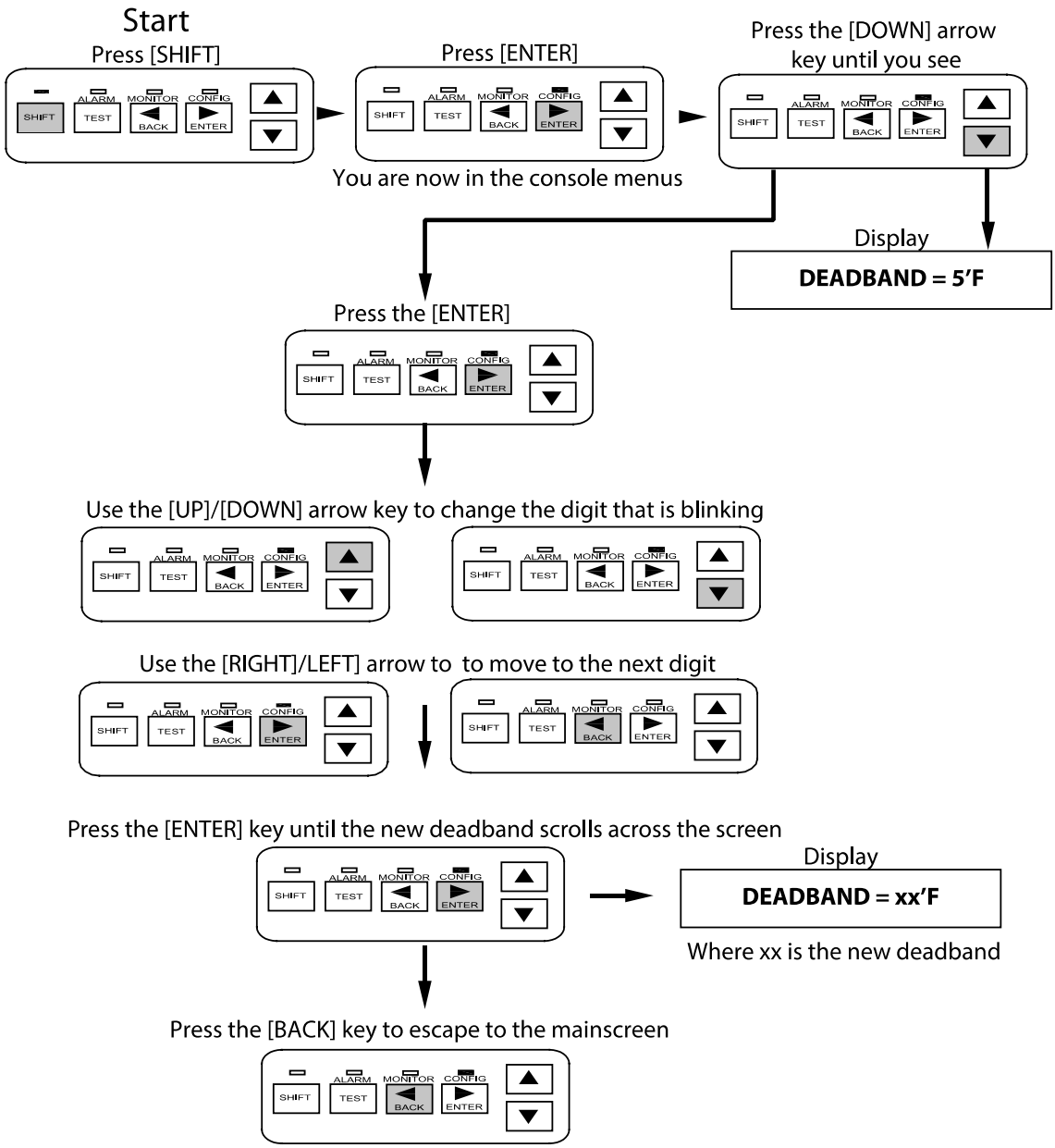

4.2.6 Proportional Ambient Sensing Control (PASC)

Purpose This control mode sets Proportional Ambient Sensing Control (PASC). See Appendix A for more details.

Setting	Range	Factory Default
Pipe Size (inch):	½, 1 or, ≥ 2	½-
Control Setpoint:	0 to 200°F (−18 to 92°C)	40°F (4°C)
Min. Design Ambient:	−99 to 125°F (−73 to 52°C)	−40°F (−40°C)
Power Adjust Factor:	10 – 200%	100%

Keystrokes for Entering PASC Setup Parameters

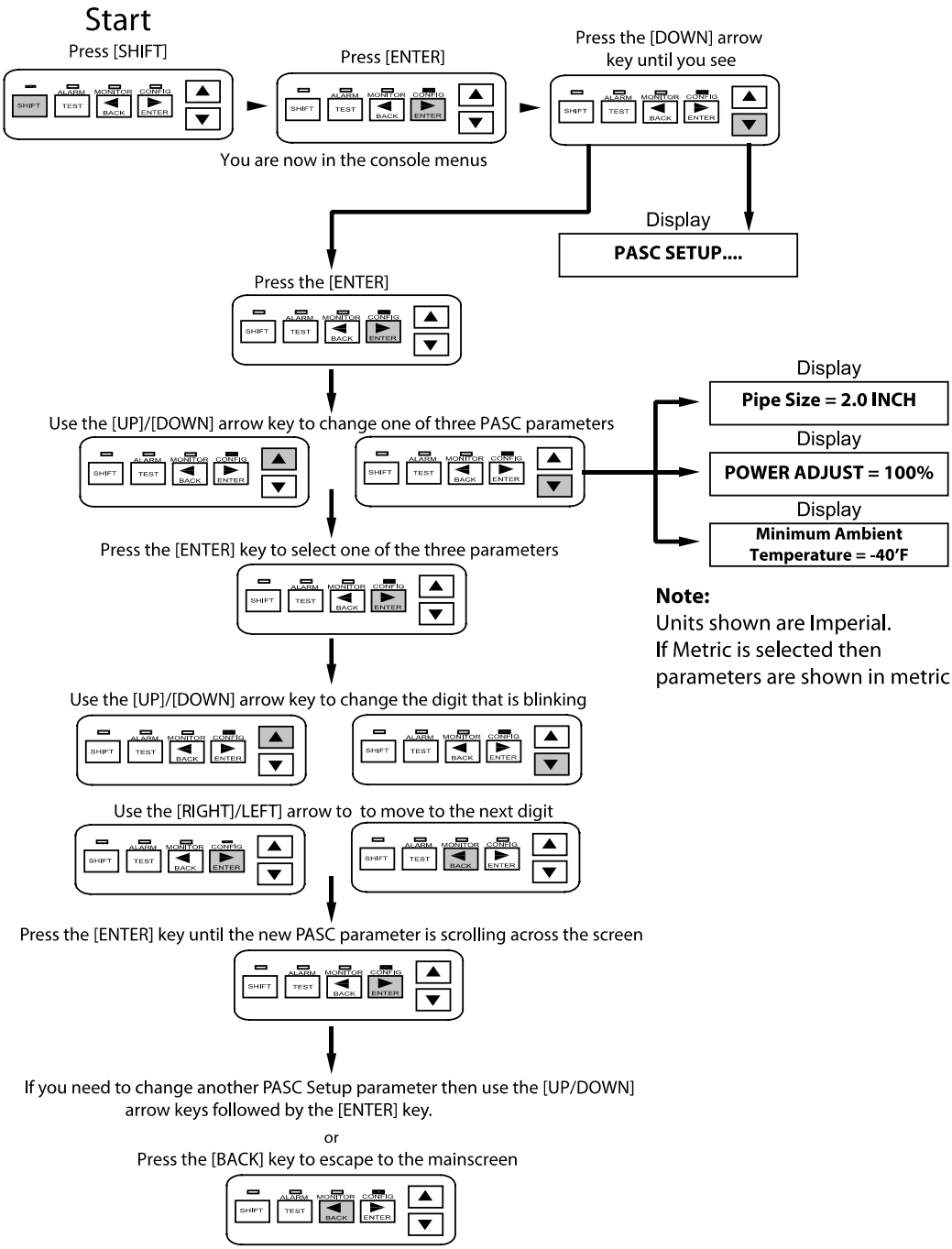

4.2.7 Low Temperature Alarm: Enable (Lo TS 1 and Lo TS 2)

Purpose	This allows the user to enable or disable the low temperature alarm for temperature sensor number 1 and 2.		
	Alarm time delay filter is factory set at 15 minutes.		
Setting/Range	Enable or disable	**Factory Default**	Enable

Keystrokes for Enabling and Disabling LO TS (Temperature Sensor Alarm) 1 and 2

Low Temperature Sensor Alarm

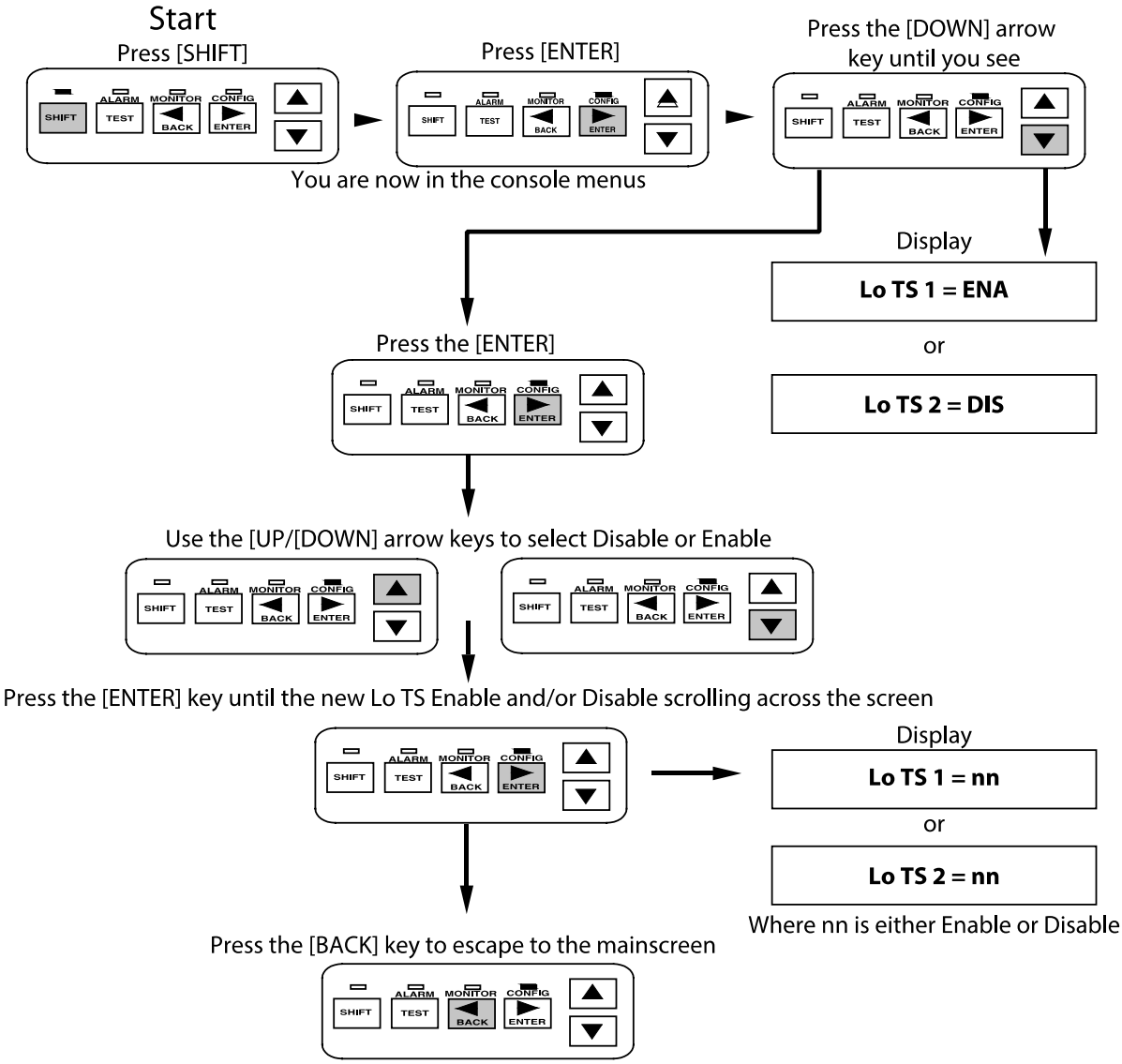

4.2.8 Low Temperature Alarm: Setting (Lo TS 1 and Lo TS 2)

Purpose	This allows the user to set the low temperature alarm setting for temperature sensor number 1 and 2.		
	Alarm time delay filter is factory set at 15 minutes.		
Setting/Range	0°F to 180°F (–18 to 82°C)	**Factory Default**	35°F (2°C)

Keystrokes for Entering the Setpoint for LO TS (Temperature Sensor) 1 and 2

Low Temperature Sensor Setpoint

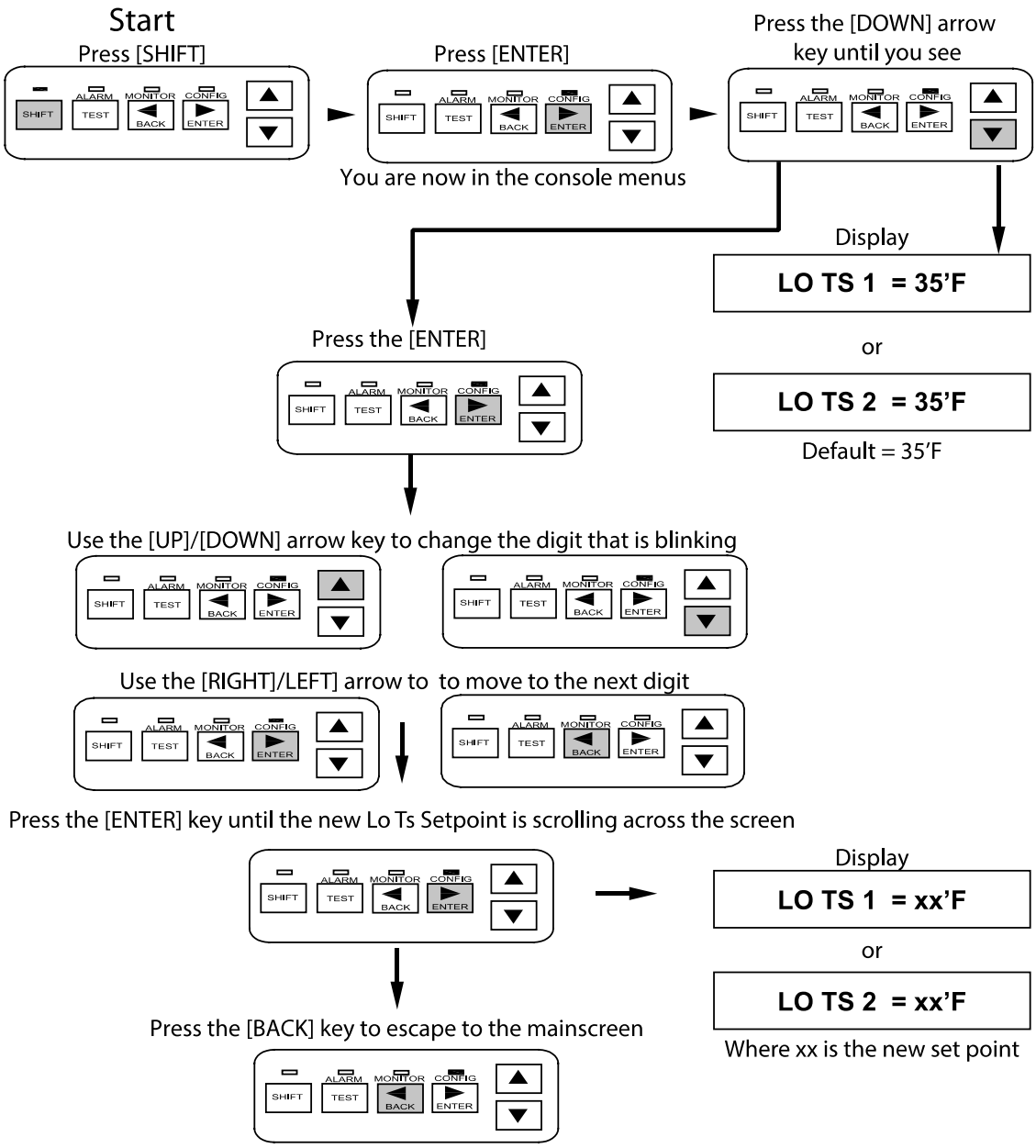

4.2.9 High Temperature Alarm: Enable (Hi TS 1 and Hi TS 2)

Purpose	This allows the user to enable or disable the high temperature alarm for temperature sensor number 1 and 2. When enabled, high limit cutout feature will force the controller output off if the temperature reading exceeds the HIGH ALARM temperature setting. This is a non-latching condition, so once the reading drops below the HIGH temperature ALARM setting, the controller will resume normal operation.		
	Alarm time delay filter is factory set at 15 minutes.		
Setting/Range	Enable or disable	**Factory Default**	Disable

Keystrokes for Enabling and Disabling HI TS (Temperature Sensor Alarm) 1 and 2

High Temperature Sensor Alarm

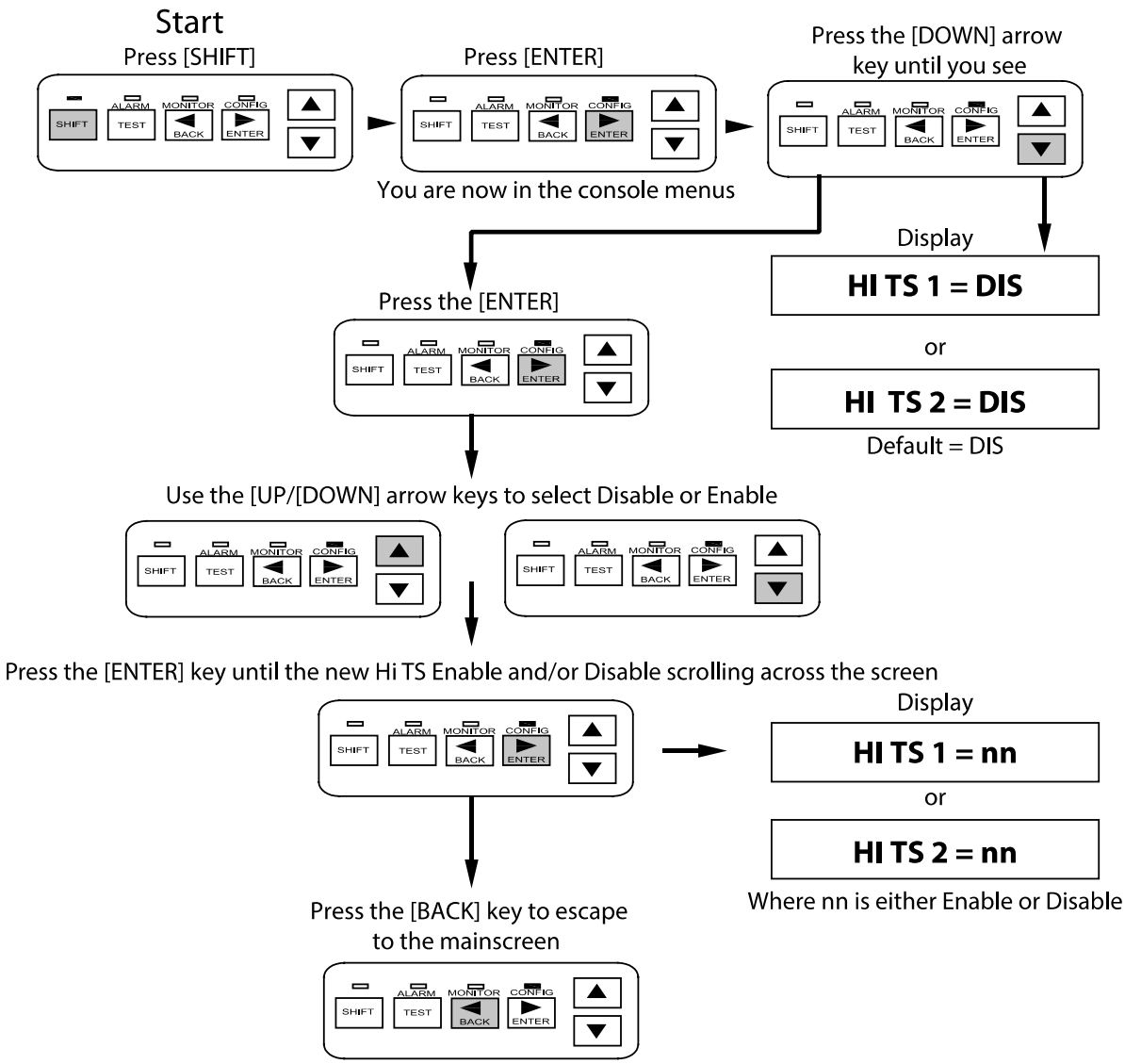

4.2.10 High Temperature Alarm: Setting (Hi TS 1 and Hi TS 2)

Purpose	This allows the user to set the high temperature alarm Setting for temperature sensor number 1 and 2.		
	Alarm time delay filter is factory set at 15 minutes.		
Setting/Range	0°F to 200°F (–18° to 93°C)	**Factory Default**	180°F (82°C)

Keystrokes for Entering the Setpoint for HI TS (Temperature Sensor) 1 and 2

High Temperature Sensor Setpoint

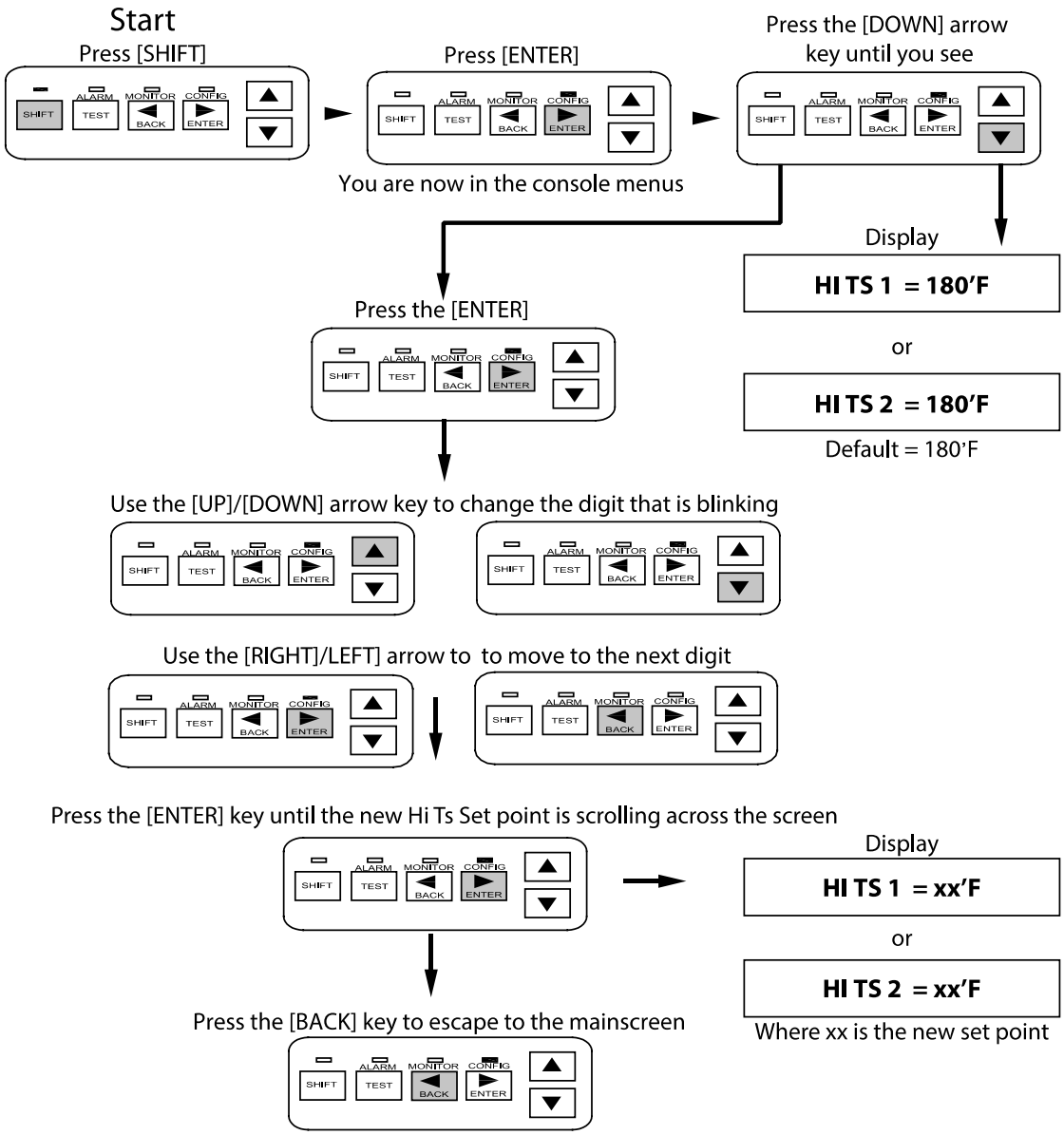

4.2.11 Temperature Sensor Failure Alarm

Purpose	This allows the user to enable or disable the temperature sensor failure alarm.		
	Alarm time delay filter is factory set < 2 minutes.		
Setting/Range	Enable or disable	**Factory Default**	Disable

Keystrokes for Enabling and Disabling TS 2

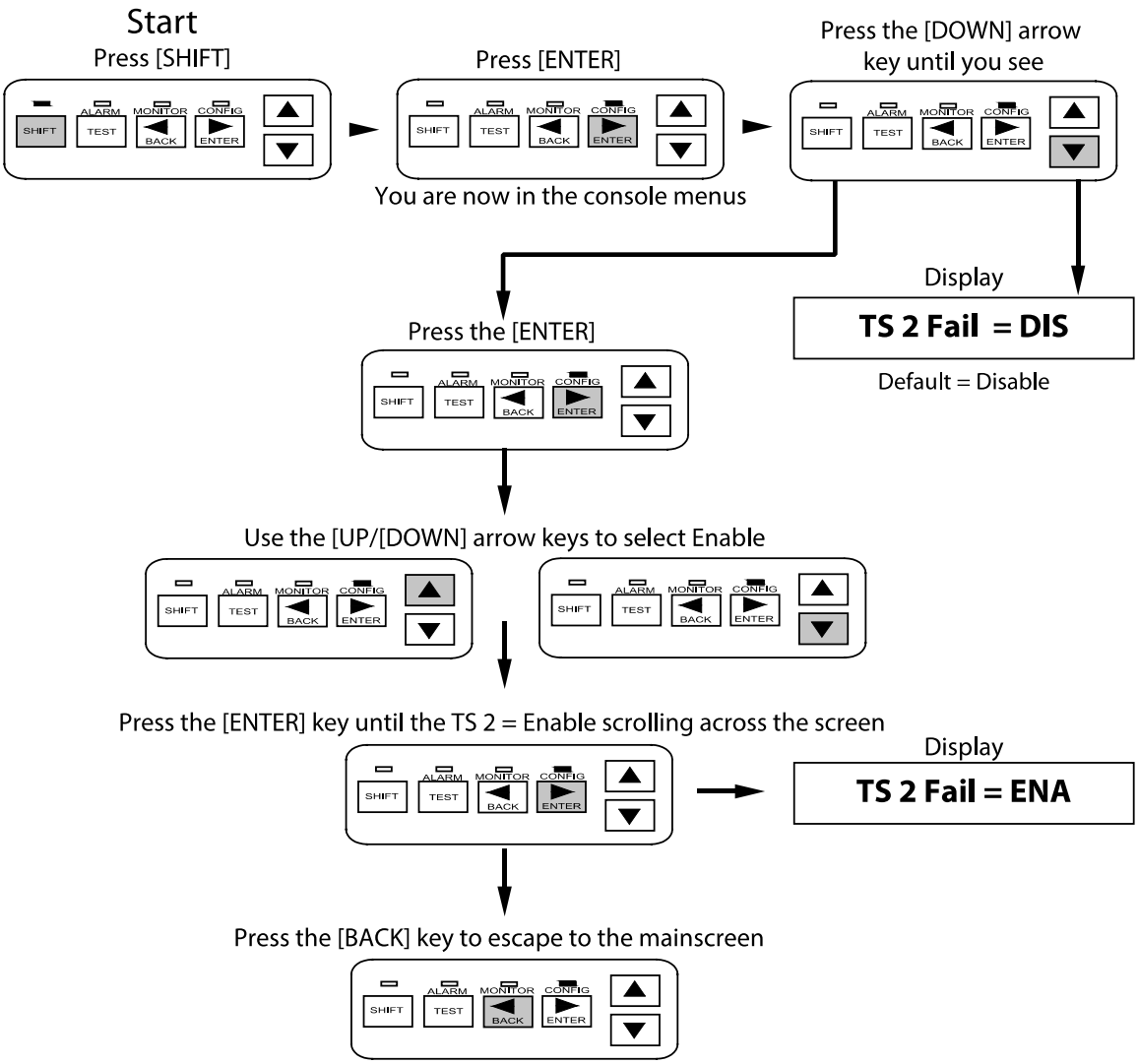

4.2.12 High Temperature Cut-out, Setpoint and Alarm (HI Limit TS1/HI limitTS2)

Purpose Set high temperature alarm and cut-out values.

Settings/Ranges:	**Factory Defaults:**
Enable/Disable HI Limit	Disable
Set point: 0°F (-18°C) to 200°F (93°C)	200°F (93°C)
Enable/Disable Alarm	Disable

Keystrokes for Selecting TS HI Limit (ENA/DIS) Setpoint and Alarm

Note: these steps can apply to TS 2 (ENA/DIS), Setpoint and Alarm

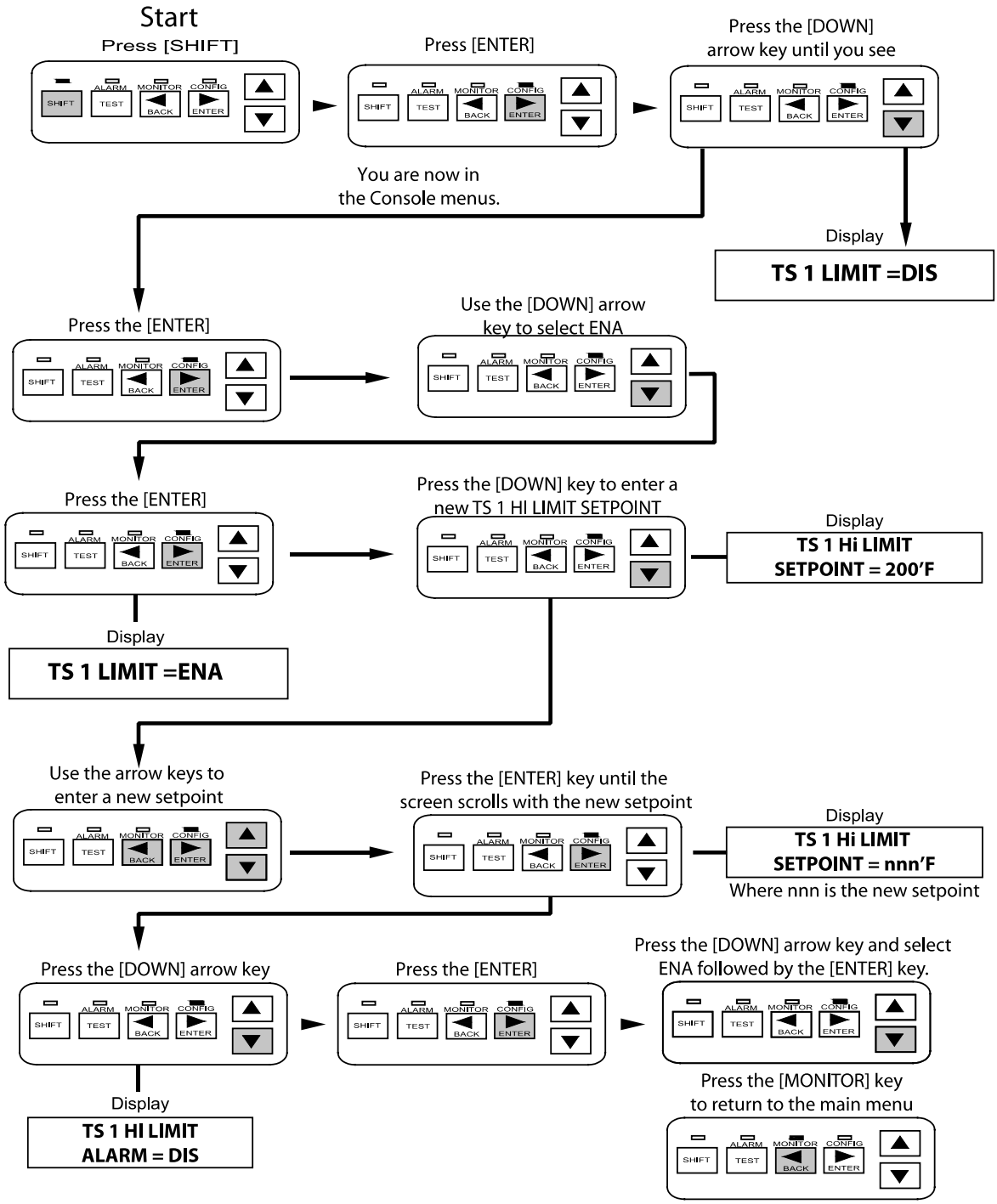

4.2.13 Low Load Current Alarm: Enable (Lo Load)

Purpose	This allows the user to enable or disable the low load current alarm to detect current levels which are lower than a preset limit for the application.		
	Alarm time delay filter is factory set at < 2 minutes.		
Setting/Range	Enable or disable	**Factory Default**	Enable

Keystrokes for Enabling and Disabling the Lo Load Current

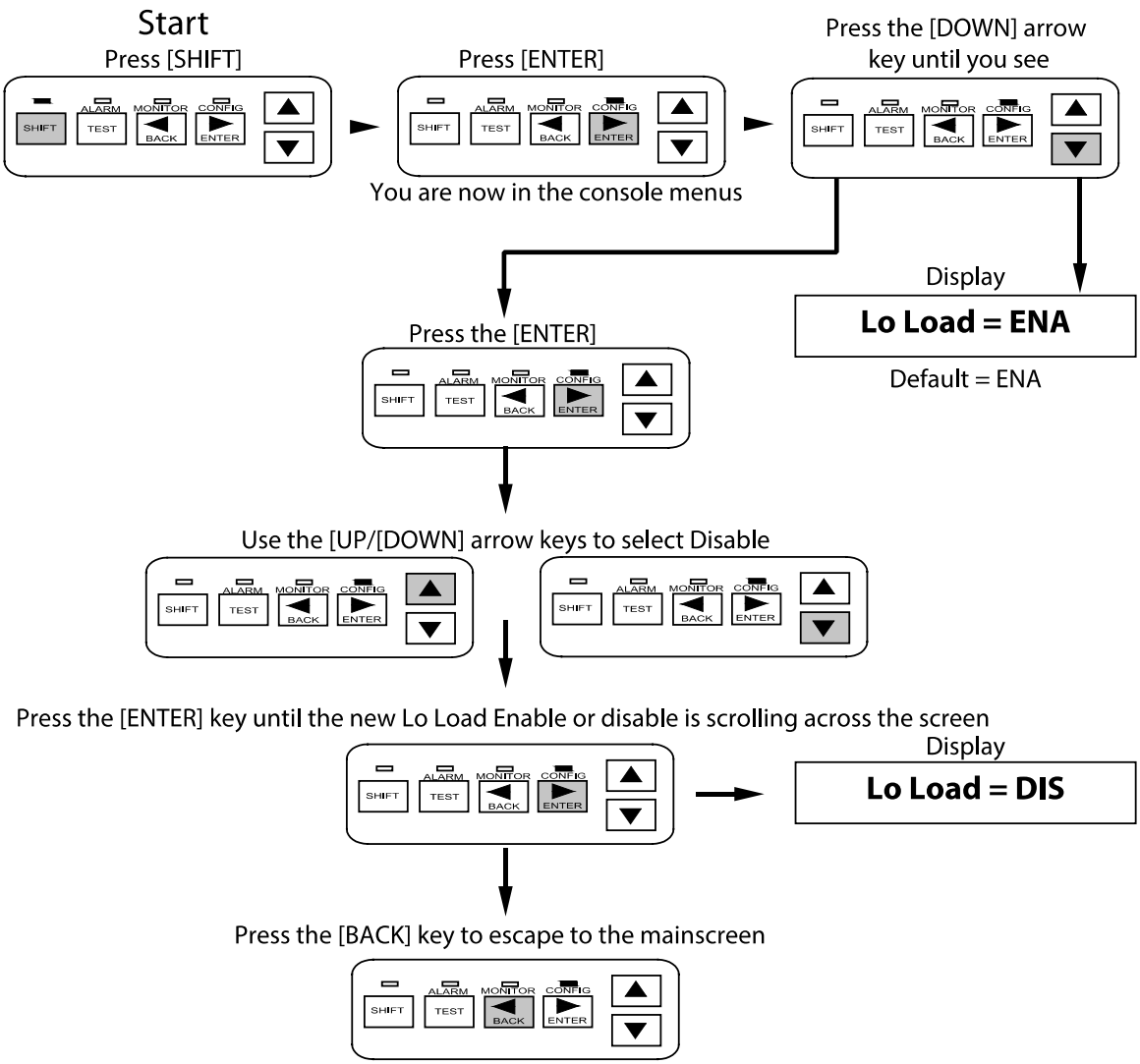

4.2.14 Low Load Current Alarm: Setting (Lo Load)

Purpose	This allows the user to set the low load current alarm level.		
	Alarm time delay filter is factory set at < 2 minutes.		
Setting/Range	0.3 A to 30 A or off	**Factory Default**	1 A

Keystrokes for Entering the LO Load Current Setpoint

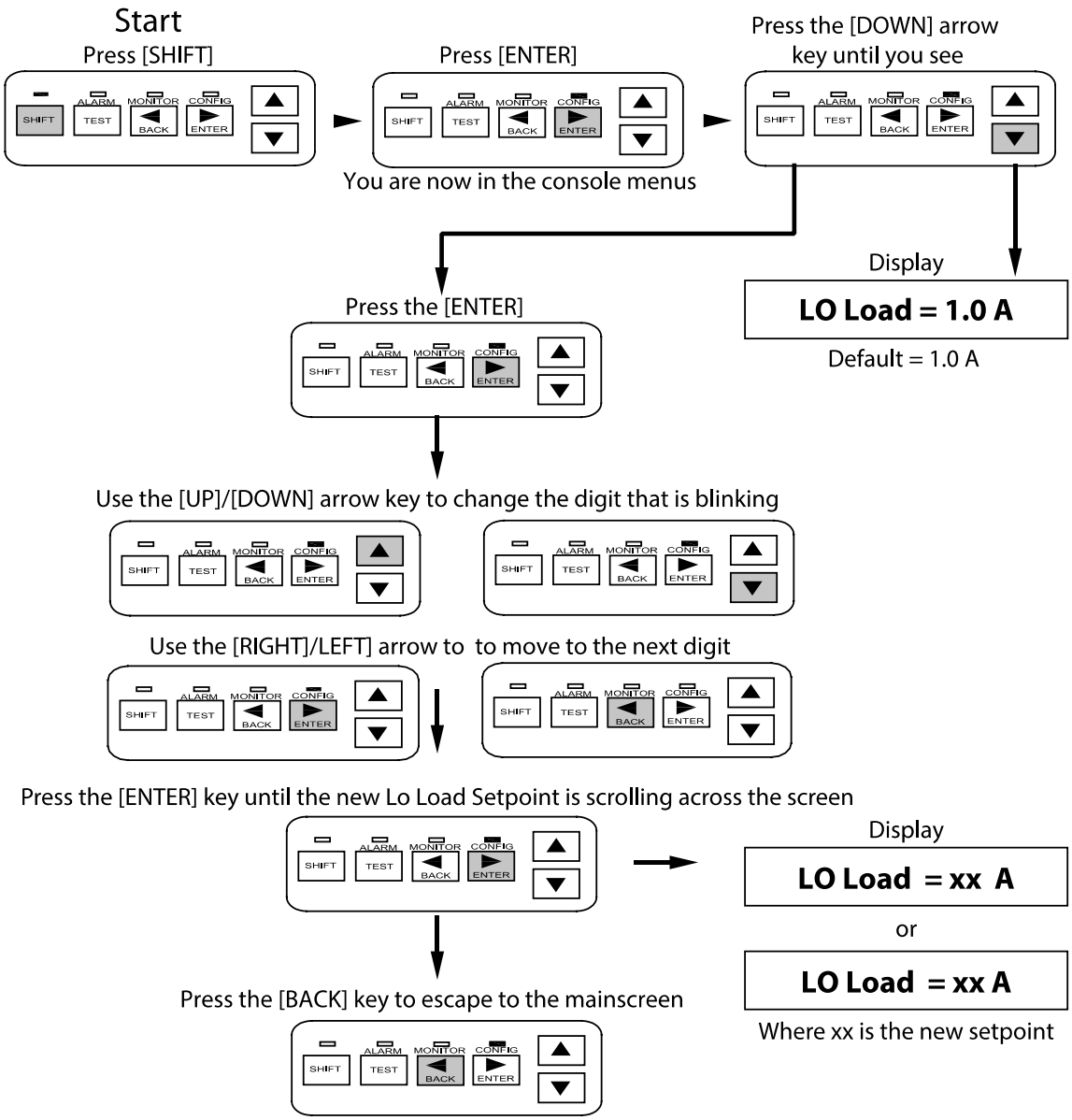

4.2.15 Factory Default Settings (Load Defaults)

Purpose To provide a quick method of re-Setting the controller's configuration parameters to the Factory Default parameters.

Setting	N/A	**Factory Default**	N/A

Keystrokes for Loading Defaults

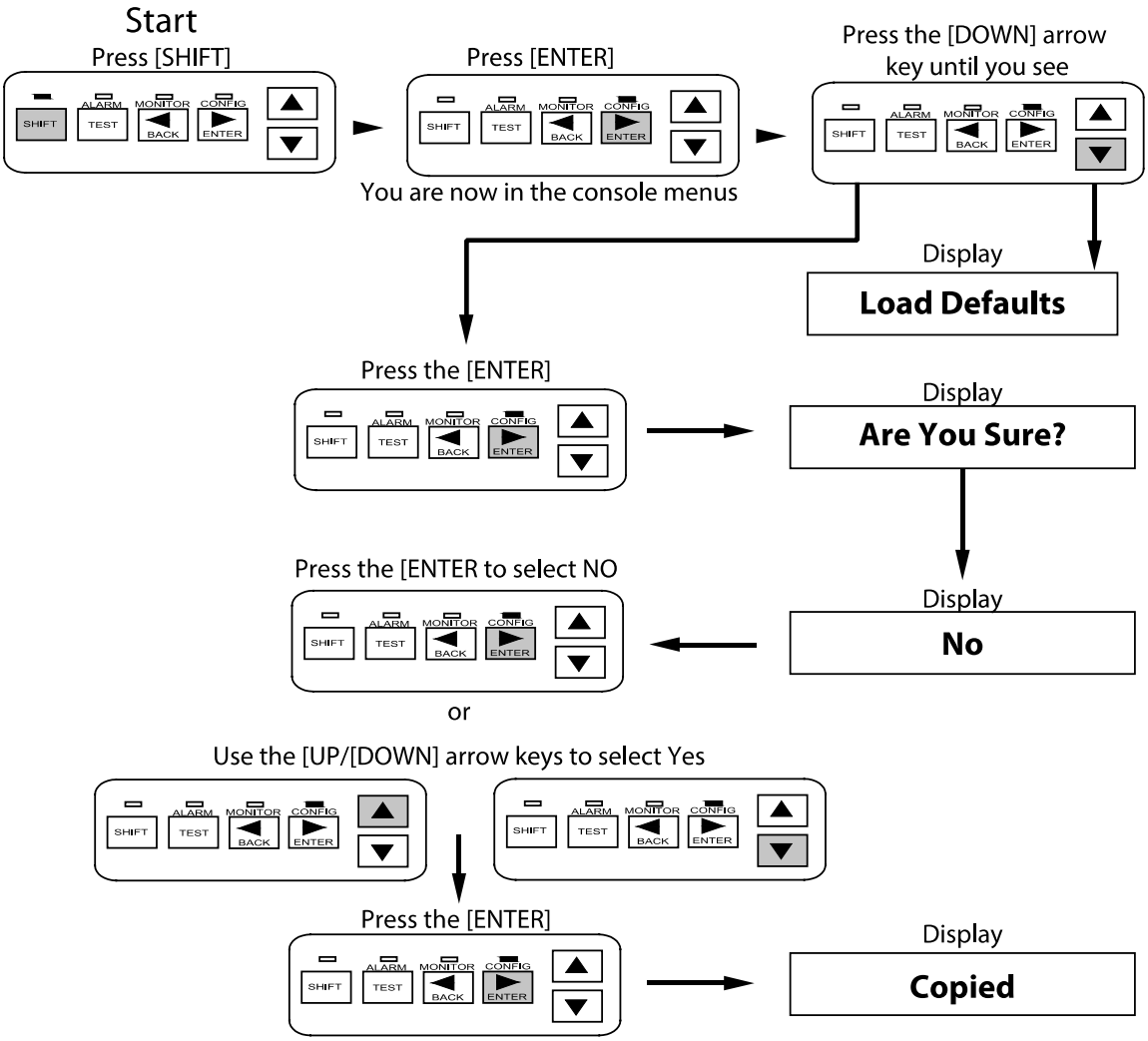

4.2.16 Ground-fault Current Alarm level (Hi GF Alarm)

Purpose	This allows the user to set the ground-fault current alarm level. Exceeding this limit will trigger the alarm to indicate that a ground-fault condition exists in the heating cable circuit. To protect against the risk of fire or shock, ground-fault level should be set at the lowest level possible to allow normal operation of the cable.		
	Alarm time delay filter is factory set as immediate		
Setting/Range	20 mA to 100 mA	**Factory Default**	20 mA

Keystrokes for Entering the Ground Fault Alarm

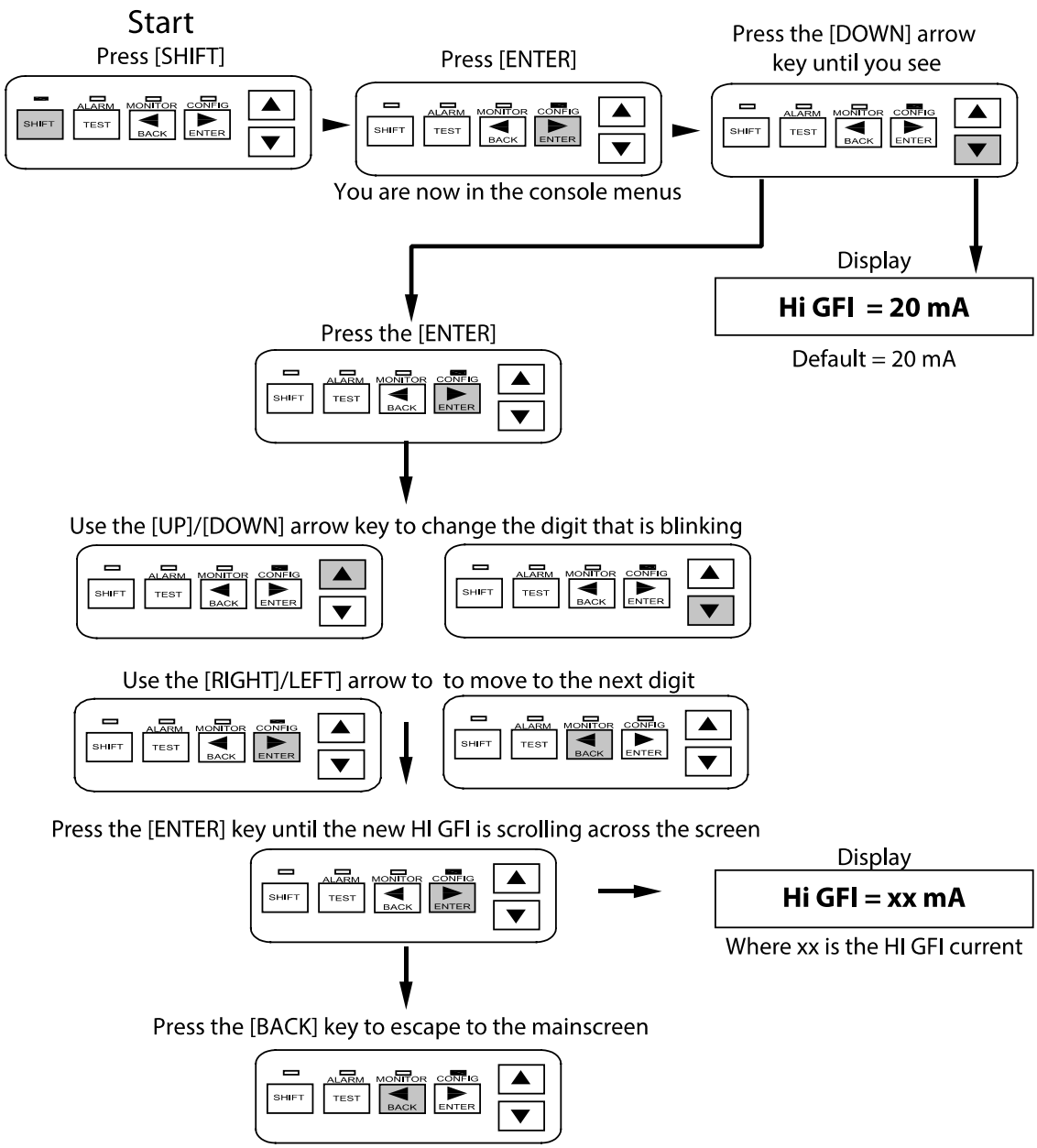

4.2.17 Ground-fault Current Trip Level (Hi GF Trip)

Purpose	This allows the user to set the ground-fault current trip level. Exceeding this limit will result in the output switch being latched off and the Ground-fault Level Trip Alarm activated to indicate a ground fault condition. ⚠ **WARNING**: Fire Hazard. Ground-fault trip alarms must not be ignored. To prevent the risk of fire, do not re-energize heating cables until the fault is identified and corrected.		
	Alarm time delay filter is factory set as immediate		
Setting/Range	20 mA to 100 mA	**Factory Default**	30 mA

Keystrokes for Entering the Setpoint for GF Trip

Ground Fault Trip Setpoint

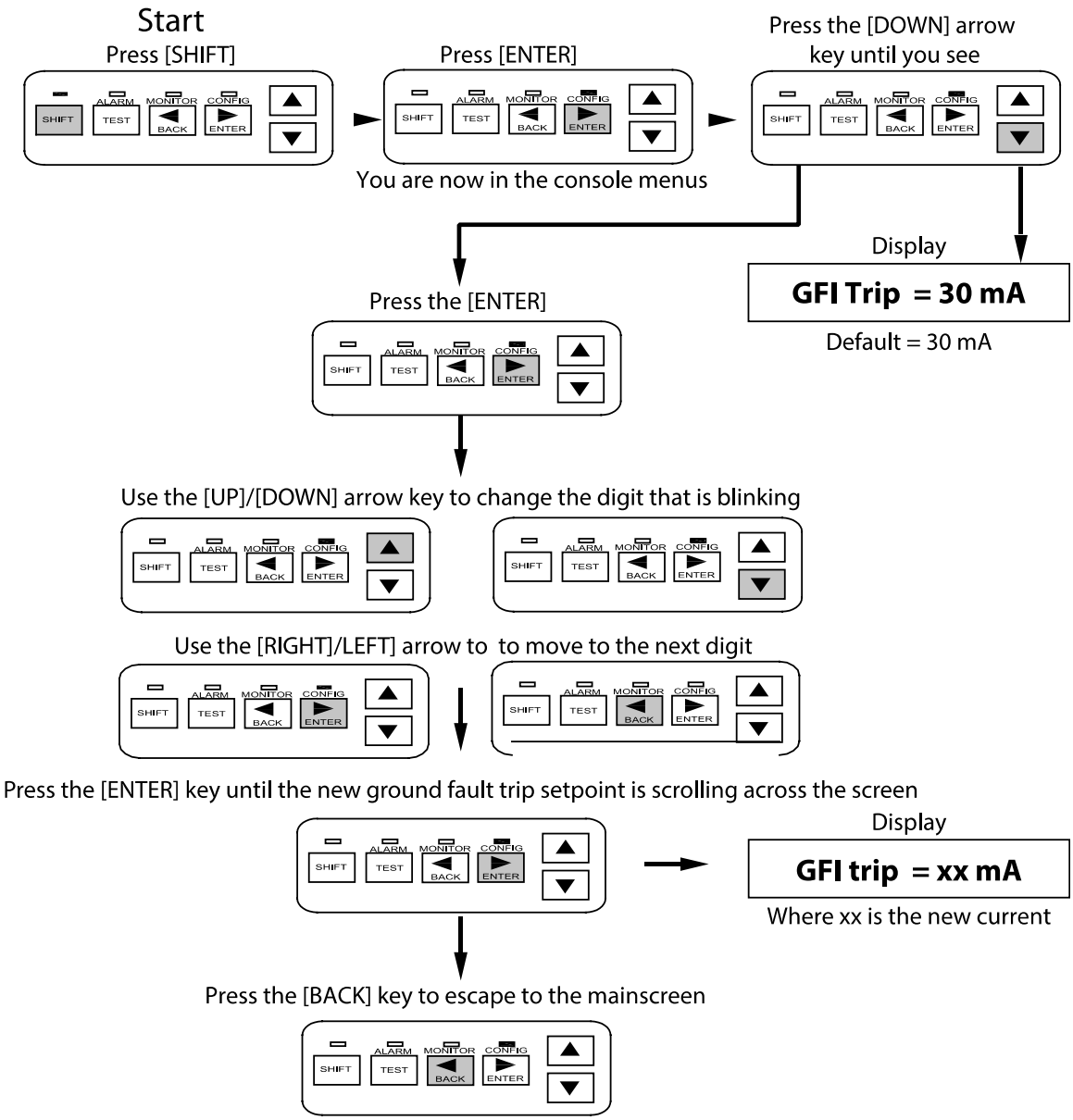

4.2.18 Temperature Sensor Failure Mode

Purpose	This mode sets the controller to turn the output switch ON or OFF if all selected temperature sensors fail.

Setting/Range	On or off	**Factory Default**	On

Keystrokes for configuring TS FAIL Mode ON or OFF

Temperature Sensor Mode

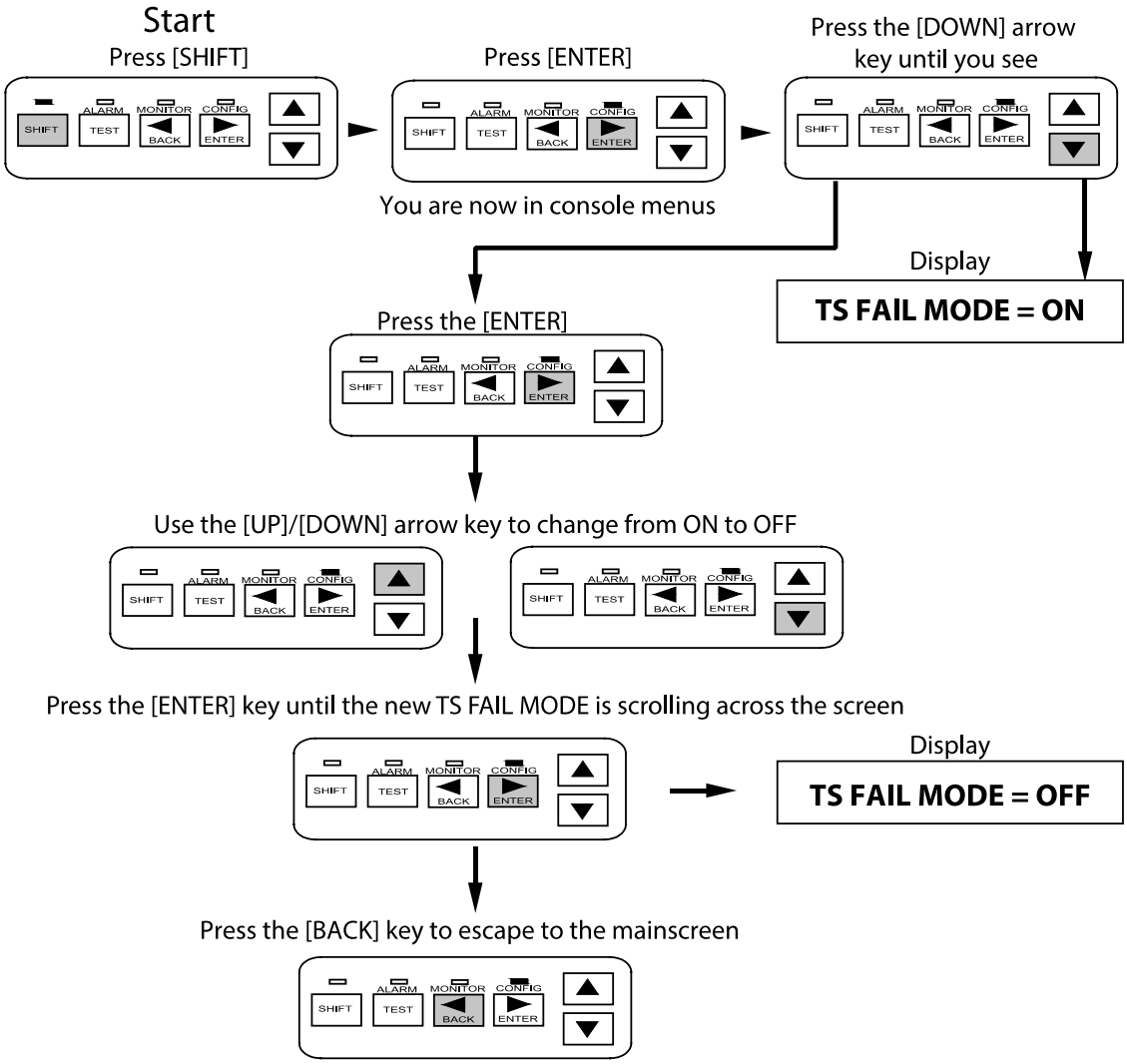

4.2.19 Temperature Sensor Control Mode (TS CLT Mode)

Purpose	The TS CONTROL MODE allows the selection of one of eight possible temperature control modes for the controller. The different modes allow redundant fail-safe temperature sensing.	
Setting/Range	1. TS1-Fail ON 2. Lowest Fail to Good 3. Lowest Fail ON 4. Average Fail to Good	5. Average Fail ON 6. TS2 Fail to TS1 7. TS2 Fail ON 8. TS1 Fail to TS2
Factory Default	TS1-Fail On	

Keystrokes for Changing the TS CLT Mode

Temperature Sensor Control Mode

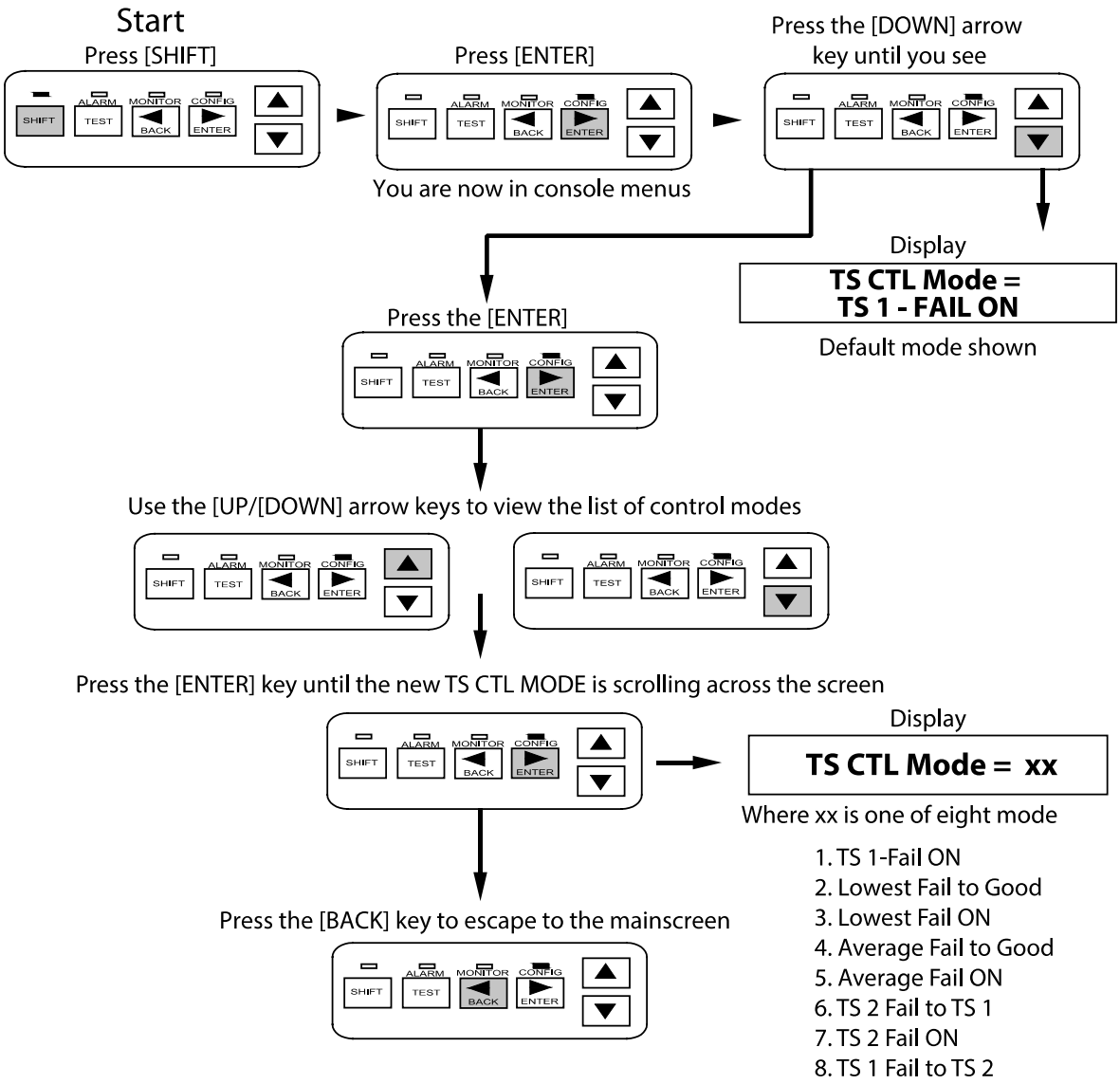

4.2.20 External Input: Inhibit or Force on.

Purpose Using an external input device to override sensor inputs: Force on or force off. Reference Figure 2.5 for the wiring connection schematic.

Setting/Range	Factory Default
Ext Input: Not used, Force on or Inhibit	Not used
Override: Remote or External input	Remote

Keystrokes for Selecting Inhibit or Force ON Mode using the External Input

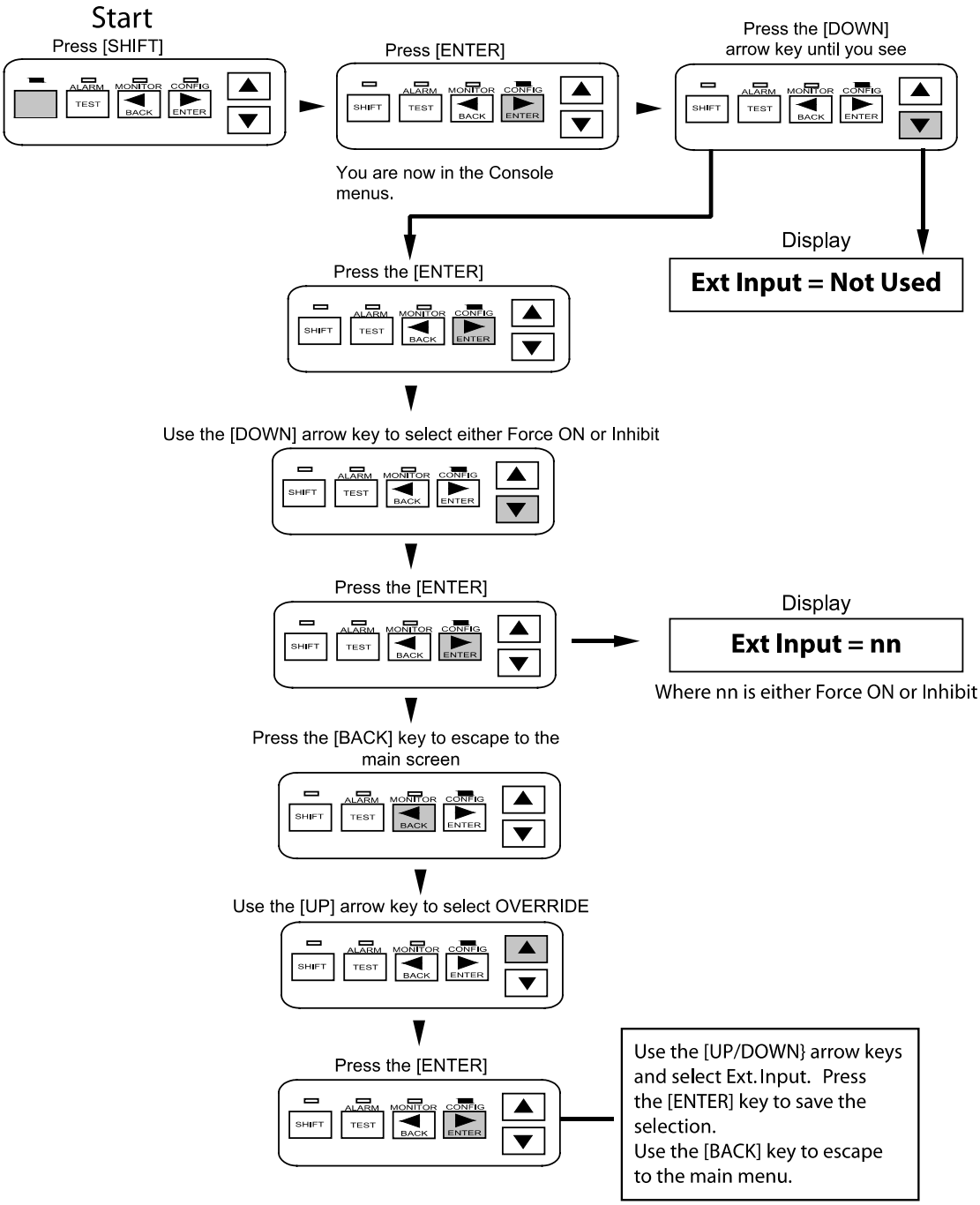

4.2.21 Firmware Version

Purpose	This menu displays the revision level of the firmware programmed into the controller.		
Setting/Range	N/A	**Factory Default**	N/A

Keystrokes for Viewing the Software Version

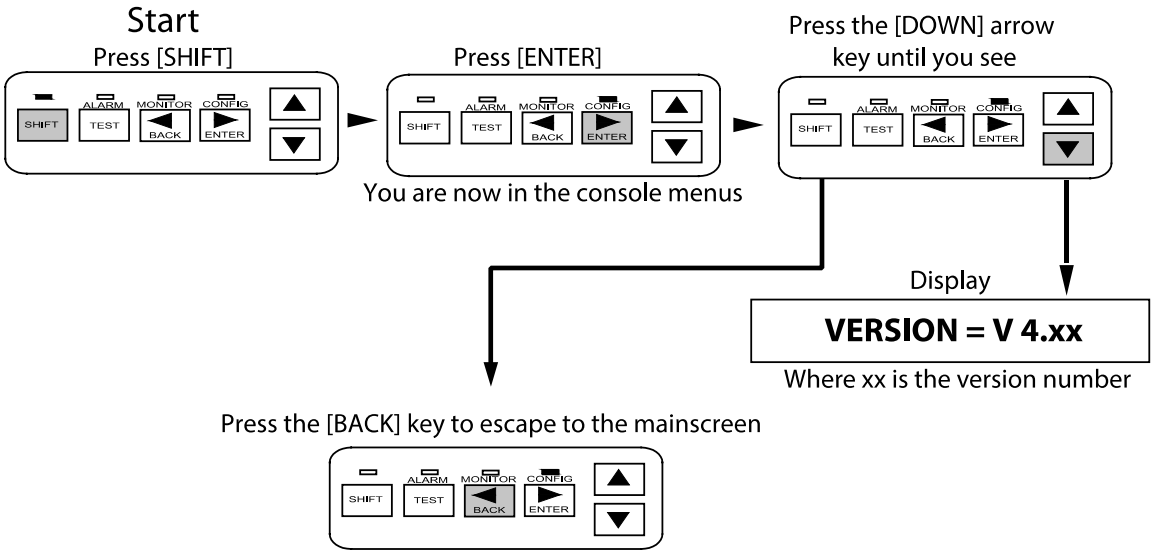

4.2.22 Passcode

Purpose	The four digit numeric PASSWORD stops unauthorized users from modifying the controller's configuration parameters using the Operator Console.

Setting/Range	0000 to 9999	**Factory Default**	0000

Keystrokes for Entering a Password

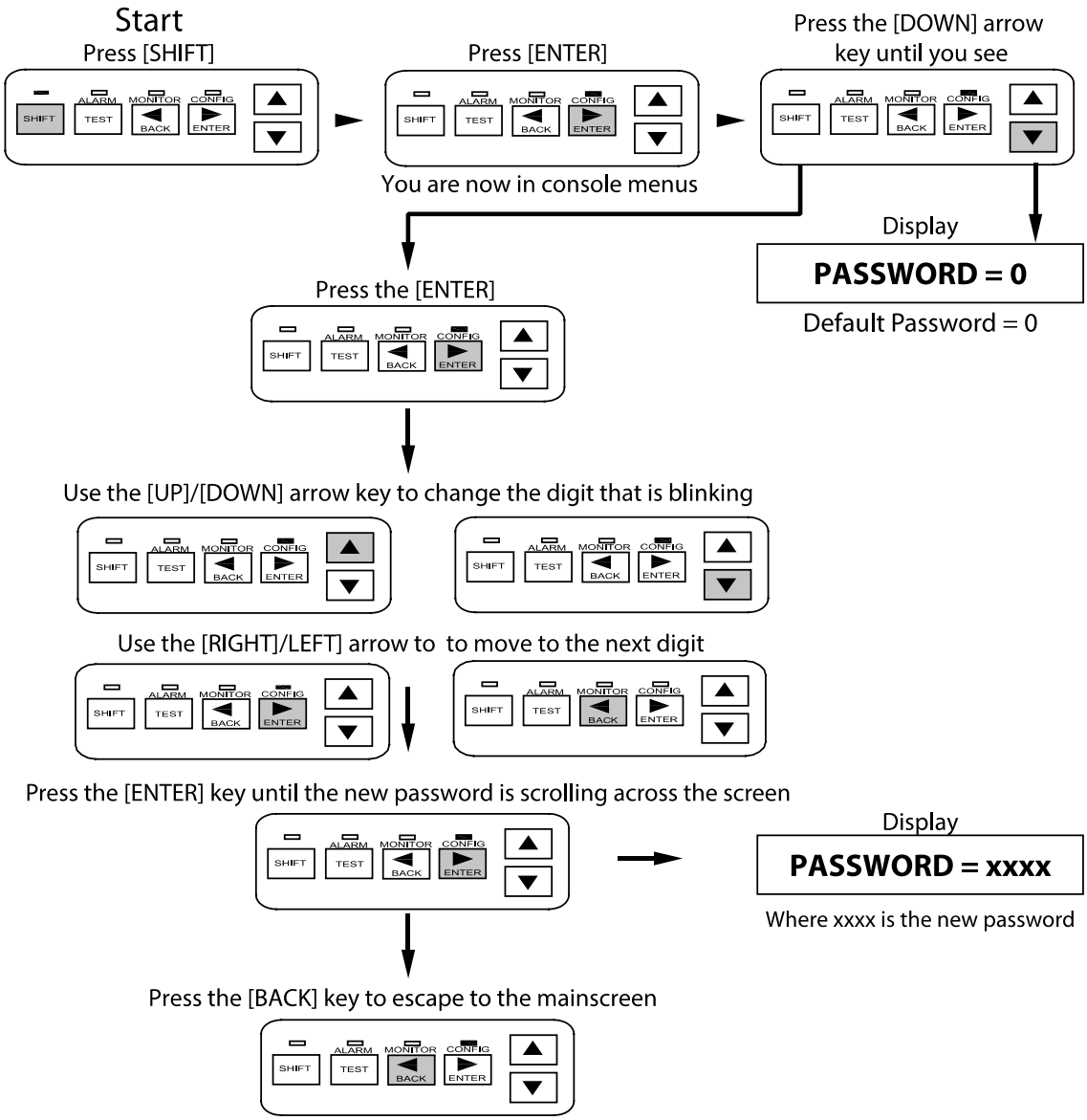

4.2.23 Communications Setup

Purpose Defines the communications language used by the controller to communicate with other devices. The C910-485 only communicates using Modbus Protocol. The C910-485 automatically detects when it is connected to the ACS-30 network.

Setting/Range	See C910-485 Communication Parameters Table	**Factory Default**	HTCBus

Keystrokes for Communication Setup

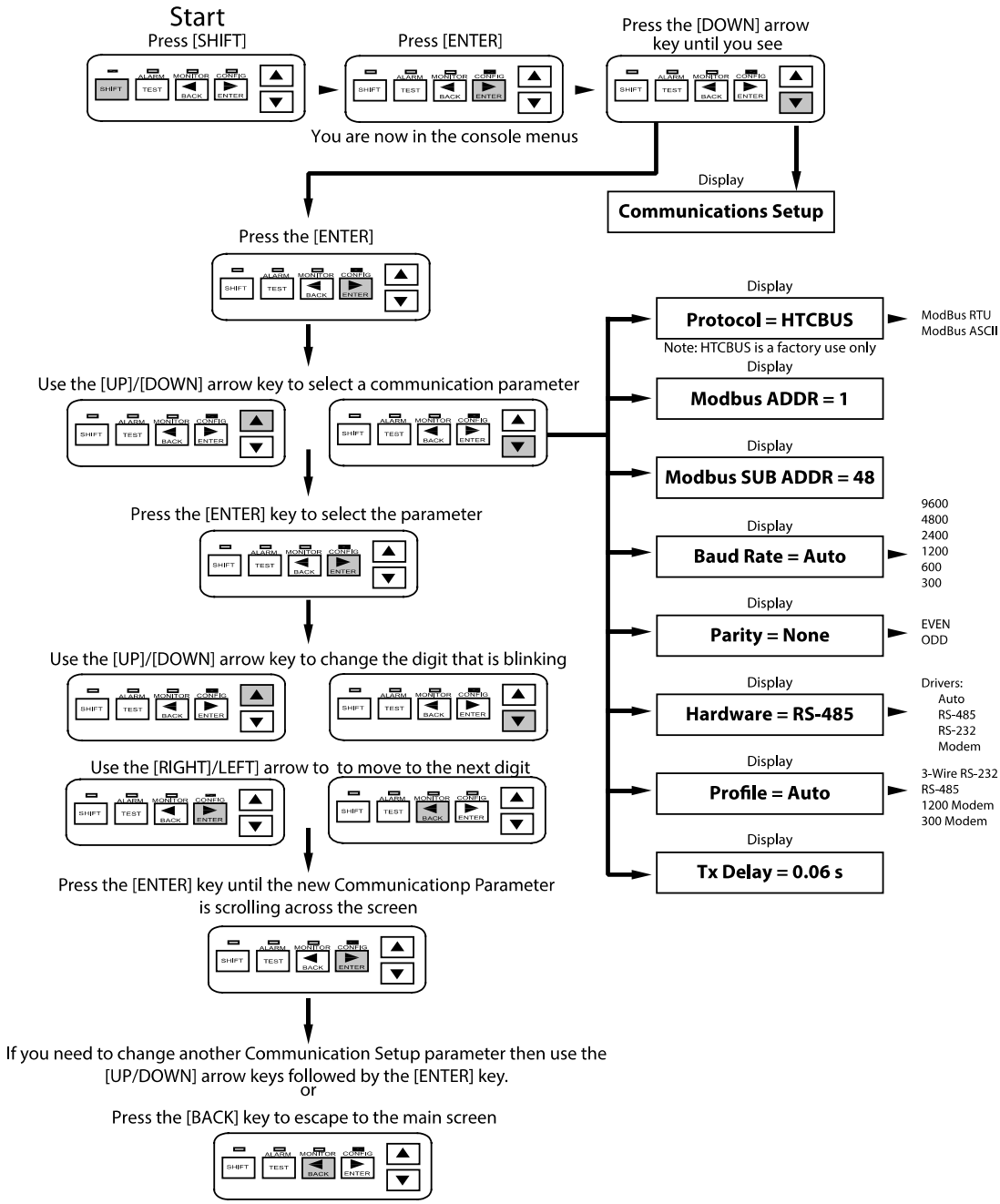

C910-485 Communication Parameters

Parameter	Settings	Notes
Protocol	HTCBus (default) Modbus RTU Modbus ASCII	If you are communicating directly with the controller using a different device, select the MODBUS protocol. For a detailed description of the controller's MODBUS mapping please refer to C910-485 Heat Trace Controller. **Note:** HTCBus is for factory use only.
Modbus Addr	1 - 247	Set the communications address as desired. Each controller on the serial communication bus must have its own unique address.
Modbus Baud Rate	Auto, 9600, 4800, 2400 1200, 600, 300. Default =Auto	Select the data rate to be compatible with other devices that will be connected to the controller for communications Purposes. It is recommended that the Setting be set to AUTO. The controller will automatically select a BAUD RATE that is compatible with the communications interface installed.
Parity	NONE, EVEN, ODD	Defines the type of parity bit to be used with MODBUS communications. Select the desired type of parity. Note that PARITY can only be selected when using MODBUS protocol.
Hardware	RS-485	Identifies the type of communications interface installed in the C910-485.
Driver	Auto, RS-485, RS-232, Modem.	Defines the way in which the controller's program communicates with the communications interface.
Profile	Auto, 3-wire RS232, RS485, 1200 BAUD Modem, 300 BAUD Modem	Defines the way in which the controller's program supports communications handshaking and communication interface signals.
Tx Delay	0.00 to 2.50 seconds	Allows a programmable delay between the receipt of a communications message and the controller's reply. In some applications, it may be necessary to delay the controller's response to an inquiry for a short period of time to allow external devices to start up, stabilize and/or synchronize.

4.2.24 Auto-Cycle: Enabling

Purpose

The autocycle function applies power to the heating cable circuit for approximate 10 seconds at the selected interval. It is used to test the integrity of the heating cable circuit.

Note: Although the autocycle function helps monitor the functionality of the heating cable circuits it does not eliminate the need for preventive maintenance as detailed in the heating cable operating manuals.

Setting/Range	Enable or disable	**Factory Default**	Disable

Keystrokes for Enabling and Disabling Auto-Cycling

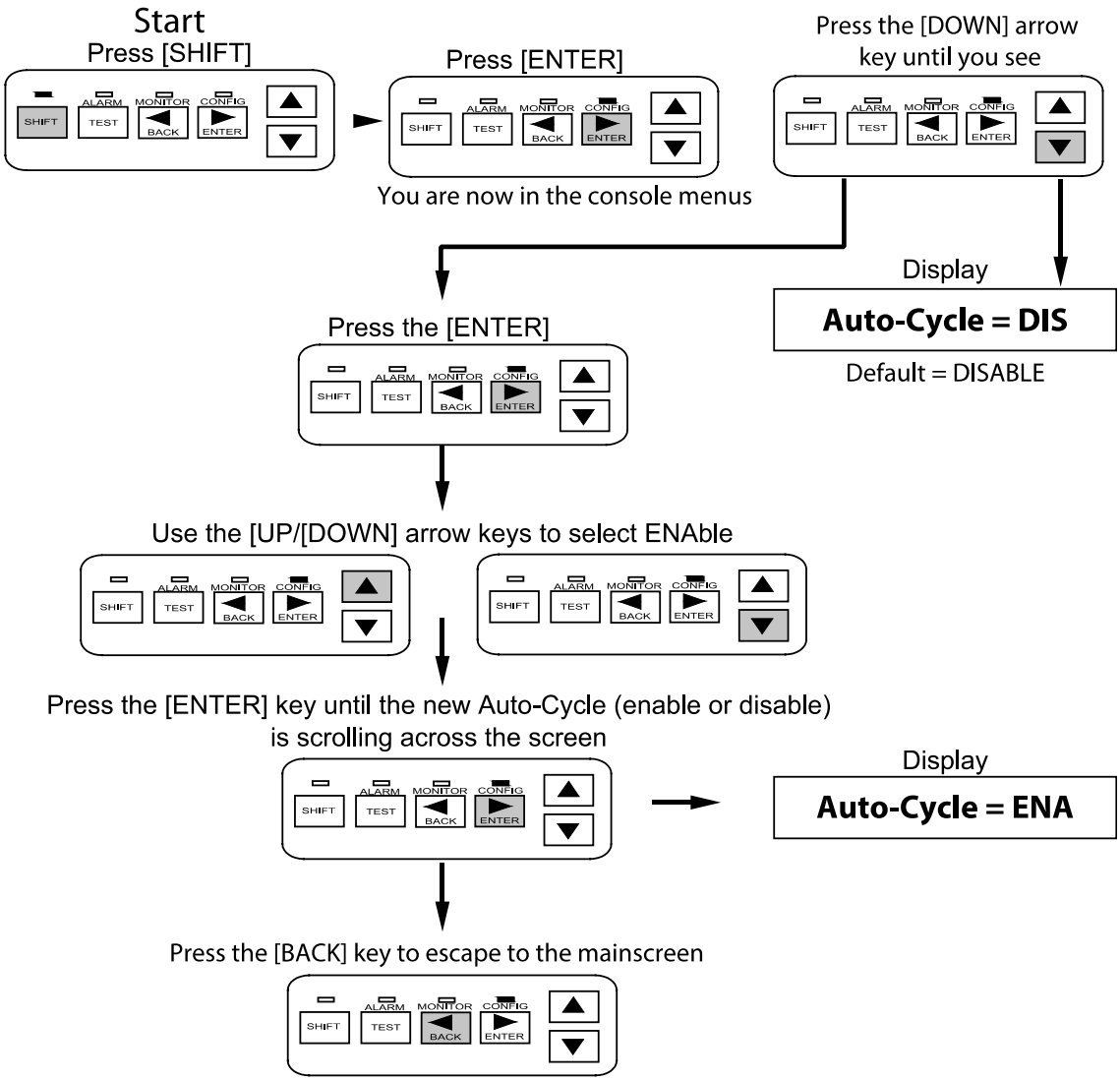

4.2.25 Auto-Cycle: Interval

Purpose	Set the interval for running the autocycle procedure		
Setting/Range	1 to 240 [minutes or hours, selected in the Auto-cycle units menu.]	**Factory Default**	8

Keystrokes for Entering Auto Cycling Interval

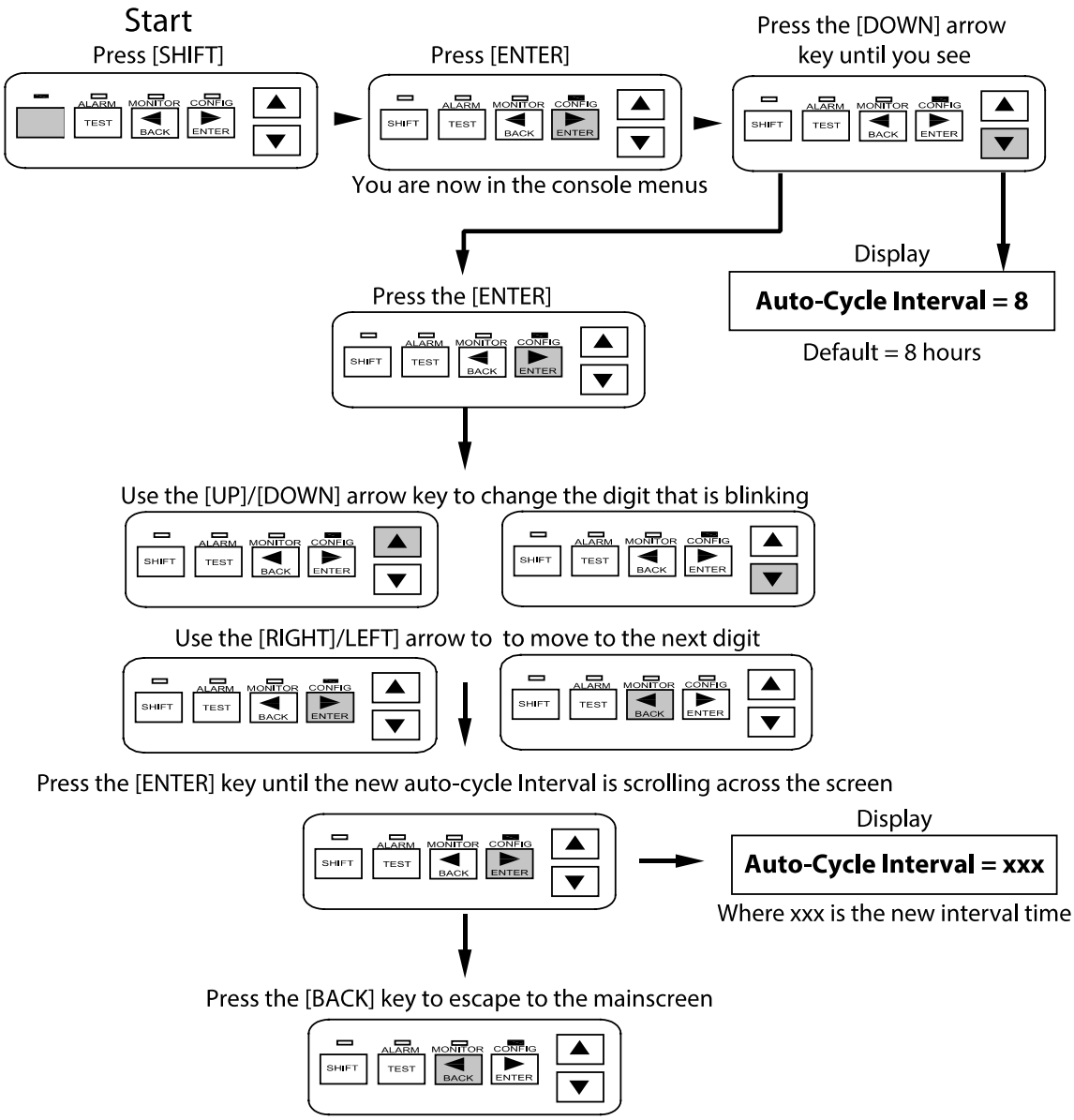

4.2.26 Auto-Cycle: Units

Purpose	Select the Autocycle interval time units.		
Setting/Range	Minutes or hours	**Factory Default**	Hours

Keystrokes for Changing Auto-Cycle Units

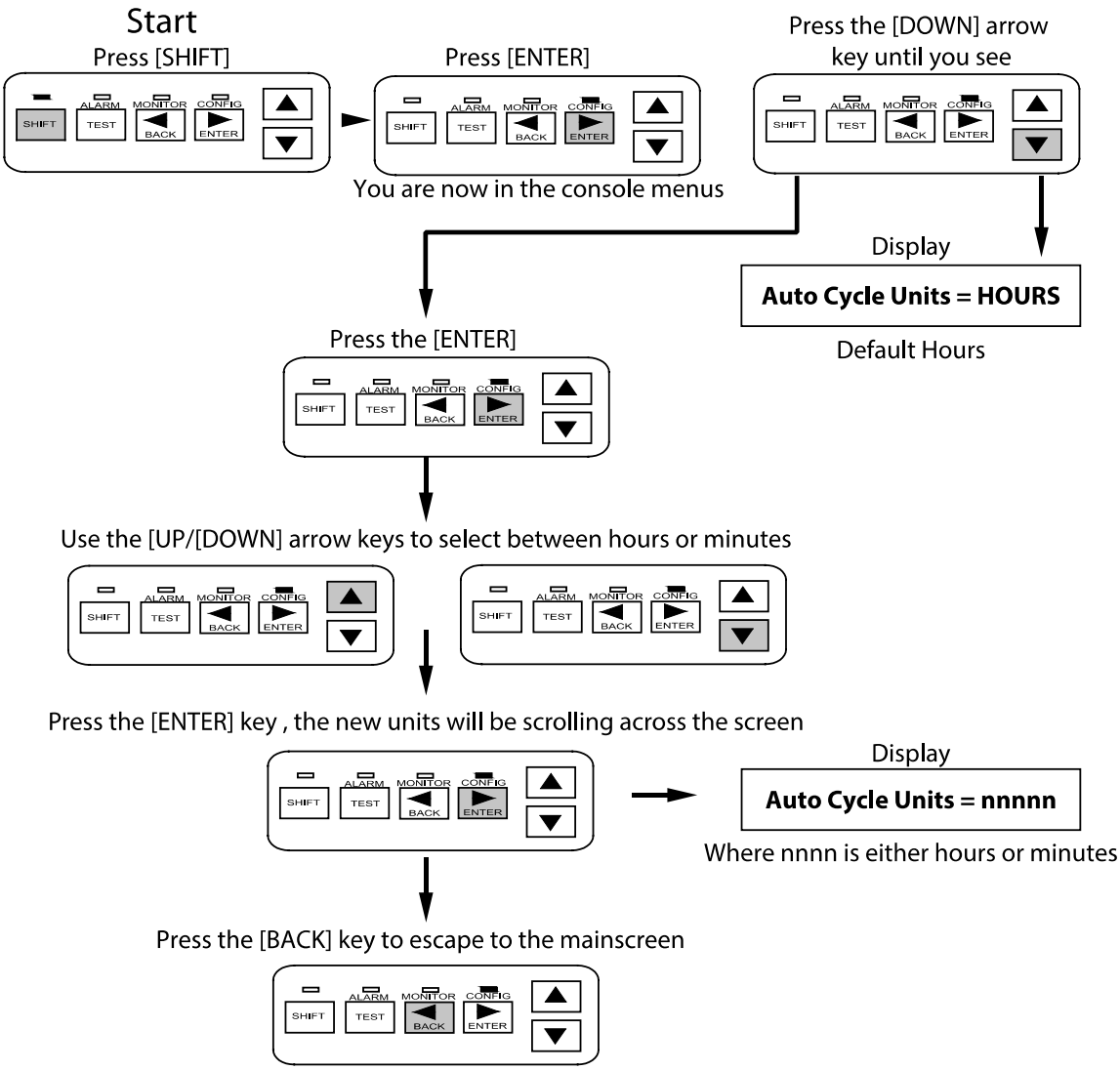

4.2.27 Contactor Count

Purpose	Generates an alarm if the number of off-to-on transitions of a contactor reaches or exceeds the Contactor Count Alarm Setting. This serves as a method to perform preventative maintenance on the contactor before a failure is likely to occur.		
Setting/Range	0 to 999,999	**Factory Default**	200,000

Keystrokes for Changing Contactor Count

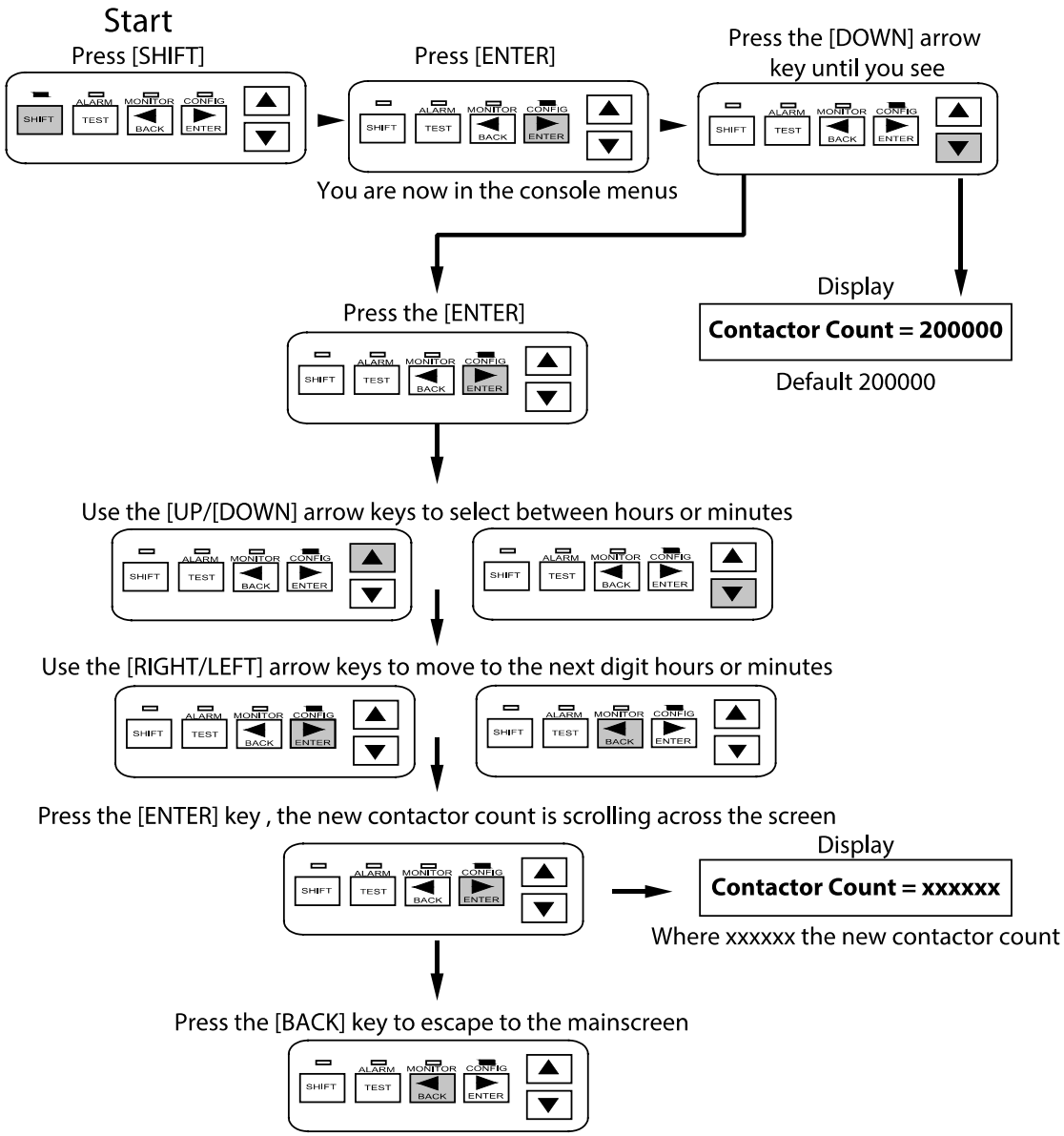

4.2.28 Monitor and Maintenance Menus

Purpose	The Monitor menu displays the measured and stored readings. You can also reset counters from this menu.		
Setting/Range	See C910-485 Monitoring and Maintenance Parameters table.	**Factory Default**	N/A

Keystrokes for Entering Monitor and Maintenance Menus

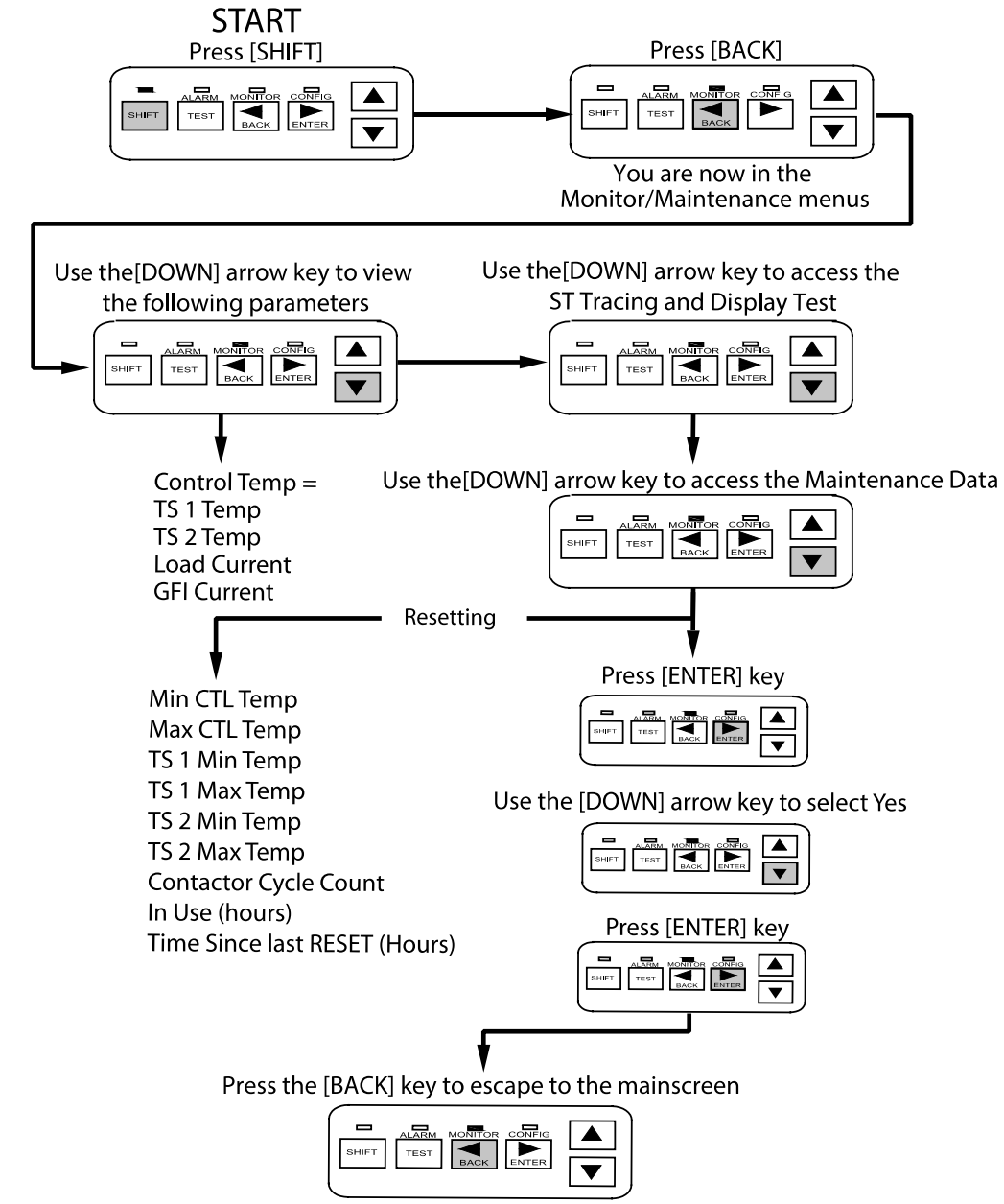

C910 Monitoring and Maintenance Parameters

Monitored variables	Description
CTL temp	Control Temp
TS1 temp	This temperature is the value that the controller is reading from the RTD connected to its TS 1 input.
TS2 temp	This temperature is the value that the controller is reading from the RTD connected to its TS 2 input, if the sensor is being used.
Load current	Displays the current being drawn by the heating cable. (A)
GFI current	Displays the ground-fault current being drawn by the heating cable. (mA)
Maintenance Tests	
Trace testing	The TEST TRACING feature temporarily overrides the temperature control, and powers the heating cable circuit for 30 seconds without having to modify the CONTROL SETPOINT temperature or any other configuration parameter.
Display test	The DISPLAY TEST feature provides an easy method of illuminating each display segment and all the LEDs of the Operator Console to ensure that they are functioning properly.
Recorded Values	
Temperature values	This feature indicates the maximum and minimum temperatures recorded by the C910-485 since the last time the values were reset: Max Control temp Min Control temp TS 1 Max Temp TS 1 Min Temp TS 2 Max Temp TS 2 Min Temp
Contactor cycle count	This feature indicates the total number of off-to-on transitions a contactor has made since the last time the CONTACTOR CYCLE COUNTER was reset. (See keystroke procedure for resetting)
Time in use	Indicates the total hours in use of the controller since its initial operation or since it was last reset.
Time since last reset	This feature indicates the total hours in use of the controller since the last reset.
Peak ground-fault current	This feature indicates the highest instantaneous ground-fault current measured since the last time the PEAK GROUND-FAULT CURRENT was reset. This current value is written to the controller's non-volatile memory once every 24 hours or whenever any maintenance data is reset by the user.

4.2.29 Acknowledging and Resetting Alarms

Purpose To acknowledge and reset any alarm conditions that may exist. Use the Up / Down Arrow keys to examine the next/previous active alarms.

Setting/Range See Alarm Filter Times **Factory Default** N/A

Keystrokes for Acknowledging and RESETING Alarms

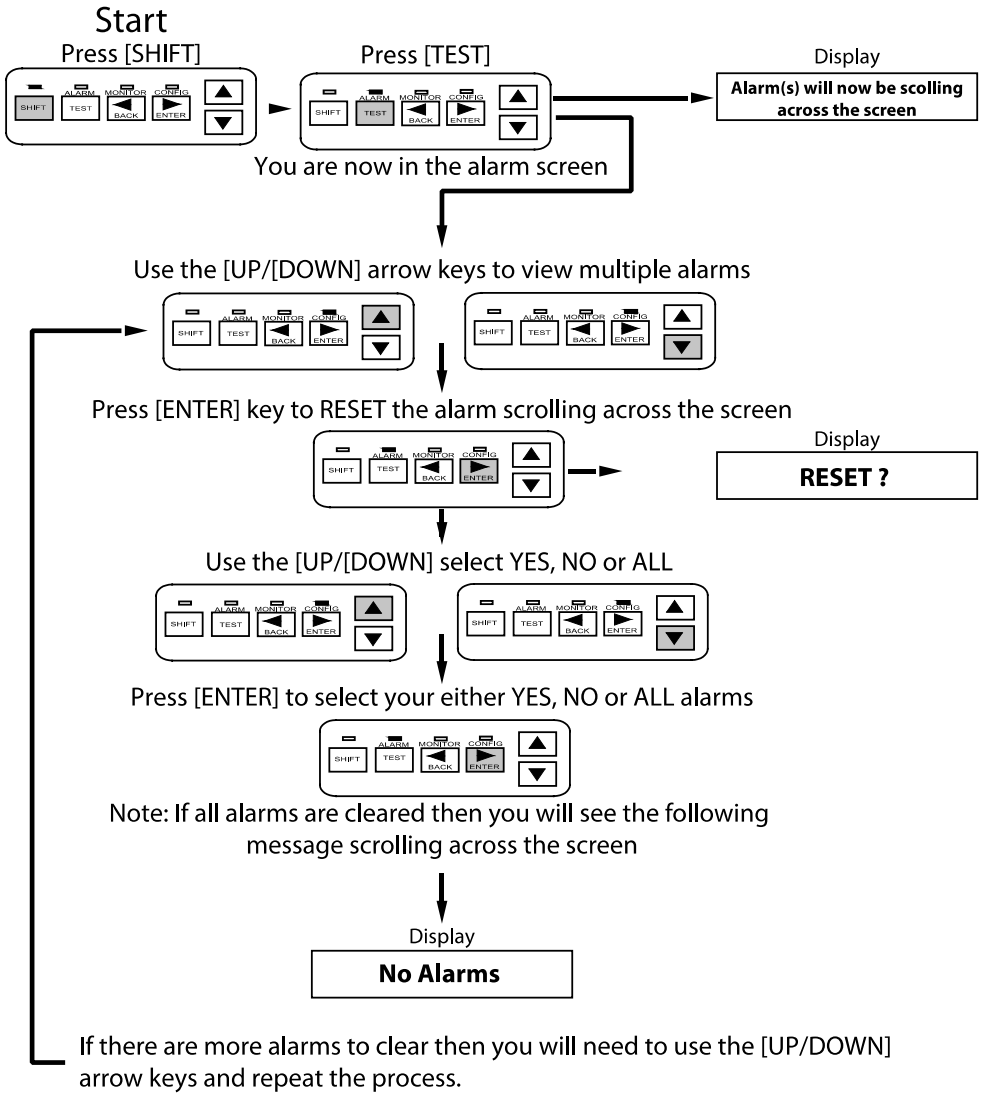

Alarm Filter Times

Alarm Type	Filter Time
Lo TS 1 and 2	15 minutes
Hi TS 1 and 2	15 minutes
Lo load current	2 minutes
Hi ground-fault alarm	10 seconds
Hi ground-fault trip	< 1 second
OPEN / SHORTED TS 1 and 2	10 seconds
Contactor count	< 1 seconds
Switch failure	2 minutes

4.2.30 Alarm Output Normal State

Purpose	Configures both the alarm output relays (dry contact and AC alarm) for normally open or normally closed operation. The normal condition is assumed to be when the HTC is powered and no alarms exist.		
Setting/Range	Normally Open (N.O.) or Normally Closed (N.C.)	**Factory Default**	Normally closed

Keystrokes for changing ALARM OUTPUT from N.C. to N.O

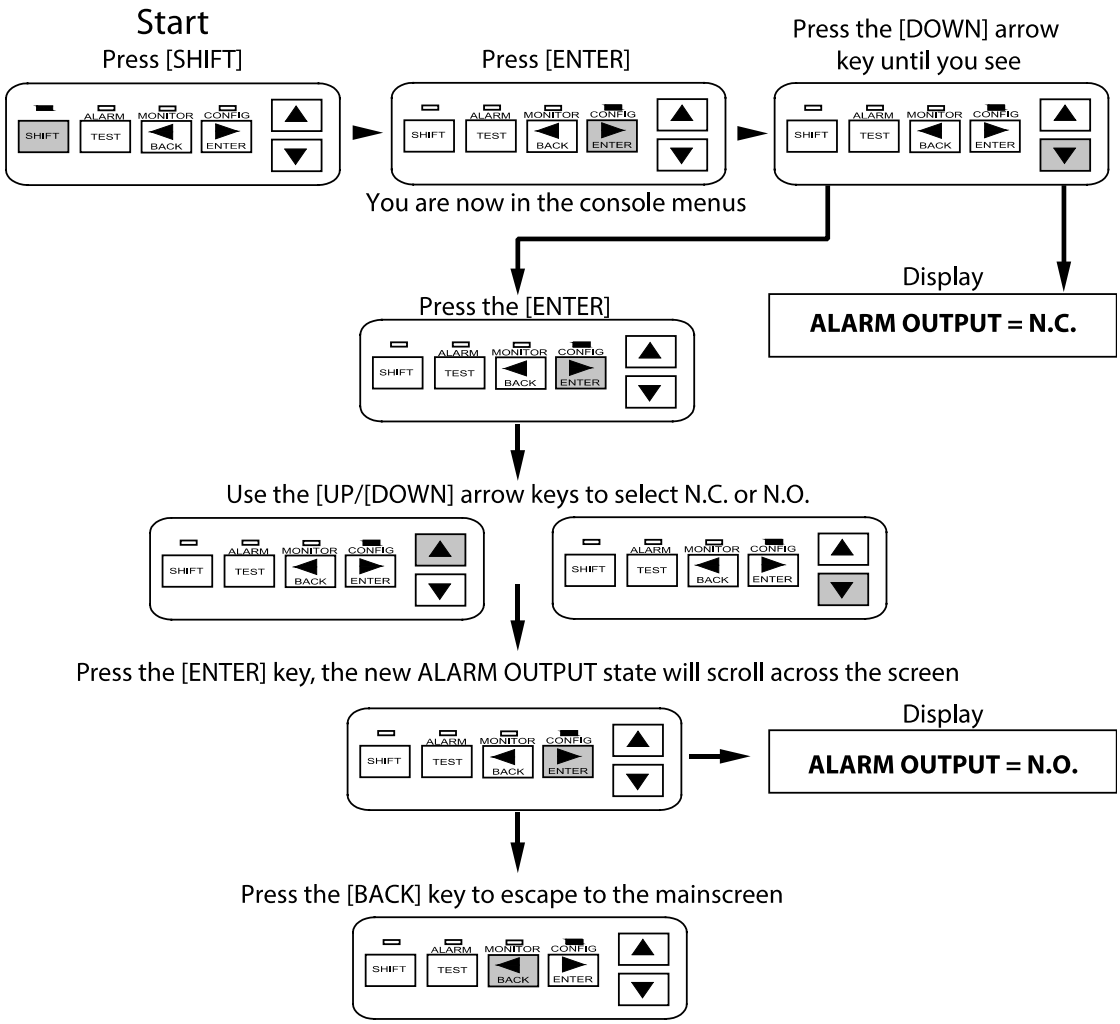

Section 5 TROUBLESHOOTING

The C910-485 may be used as an effective troubleshooting tool to pinpoint problem areas of heating cable circuits. Described below are a few of the more common problem areas, their symptoms, and parameters to check to determine the actual faulty portion of the heating cable circuit.

Symptom	Probable Cause	Corrective Action
RTD failure alarm	RTD is not a 3-wire 100 Ω Platinum	Install correct RTD
	Damaged RTD sensor or extension cable	Install new RTD and/or cable
	Incorrectly wired	Re-install RTD connections
Seemingly incorrect temperature	Incorrect RTD used	Install correct RTD
	Damaged RTD sensor or connection cable	Install new RTD and/or cable
	C910-485 not functioning correctly	Verify correct reading input Connect a 100 Ω resistor across the source or sense terminal and common. Insert a jumper between the source and sense terminals. Apply power to the controller. The indicated or displayed temperature should be about 32°F (0°C).
Unstable or bouncing temperature	Bad, damaged or incorrectly installed RTD extension wire.	Wire used for extension of the RTD should be three-wire, twisted and shielded with the shield grounded at the controller only. Each of the three lead wires must be of the same gauge.
	Terminal connections are not tight	Verify tightness of connections
	RTD or extension cable damaged	Install new RTD and/or cable
High temperature TS 1/ TS 2	Alarm temperature setting too close to maintain temperature	Increase setting
	Flow of hot water through pipe	
	Incorrect heating cable wiring	Verify heating cable wiring
LOW temperature TS 1/TS 2	Alarm temperature setting too close to maintain temperature	Decrease setting
	Heating cable not sized properly for the application	Refer to the appropriate heating cable design guide for correct product selection
	Damaged, wet, or missing thermal insulation	Replace or install correct thermal insulation
Control TS failure	Failure of the RTD designated as the controlling sensor.	Check setting for TS FAIL MODE the output switch may be latched off or on until this failure is corrected
	Incorrect or damaged field wiring	Re-install RTD connections
	Damaged temperature sensors	Install correct RTD.

Ground-fault alarms	Incorrect installation, wet system components or damaged cables.	Perform heating cable commissioning tests outlined in the heat cable operation manuals.
	Incorrect neutral return wiring	Check that the heating cable circuit neutrals return to the controller and are not connected directly to the distribution panel.
	Alarm setting too close to normal leakage current	Ground-fault level should be set at the lowest level possible, but high enough to allow normal operation of the cable.
	⚠ **WARNING**: Fire Hazard. Ground-fault trip alarms must not be ignored. To prevent the risk of fire, do not re-energize heating cables until the fault is identified and corrected.	
Low current	Low or no source voltage	Verify correct power distribution
	Damaged or inoperative heating cable	Repair or replace heating cable
	Open connection—wiring problem	Verify correct power distribution wiring
	Contactor failed open	Replace or repair controller
Switch failure	Output switch has failed “closed”	Replace or repair controller
Contactor count	Number of off-to-on transitions of a contactor has exceeded the CONTACTOR COUNT ALARM setting and the contactor should be replaced.	Inspect contactor and replace if necessary.

Section 6 APPENDIX A: PROPORTIONAL AMBIENT SENSING CONTROL (PASC)

PASC takes advantage of the fact that the heat loss from a pipe is proportional to the temperature difference between the pipe and the ambient air. This is true regardless of heating cable, insulation type, or pipe size. Once the heat tracing and insulation on a pipe has been designed to balance heat input with heat loss and maintain a particular temperature, the main variable in controlling the pipe temperature becomes the ambient air temperature.

The C910-485 has a control algorithm that uses the measured ambient temperature, desired maintain temperature, minimum ambient temperature assumption used during design, and size of the smallest pipe diameter to calculate how long the heating cable should be on or off to maintain a near-constant pipe temperature. The power to the heat tracing is proportioned based upon on the ambient temperature. If the ambient temperature is at or below the “minimum design ambient plus 3°F” the heating cable will be on 100%. If the measured ambient is at or above the “maintain temperature –3°F” the heating cable will be on 0%. For any measured ambient between “minimum design ambient” and “maintain temperature,” the heating cable will be on a percentage of the time equal to (maintain temperature – measured ambient) / (maintain temperature – minimum design temperature).

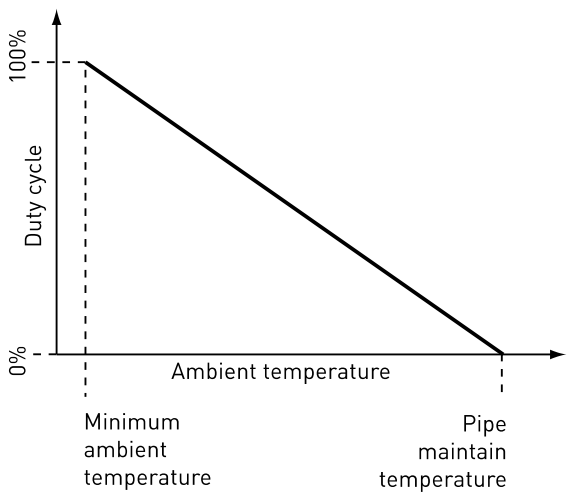

Section 6 APPENDIX B: C910-485 WIRING DIAGRAM TO FIRE ALARM PANEL

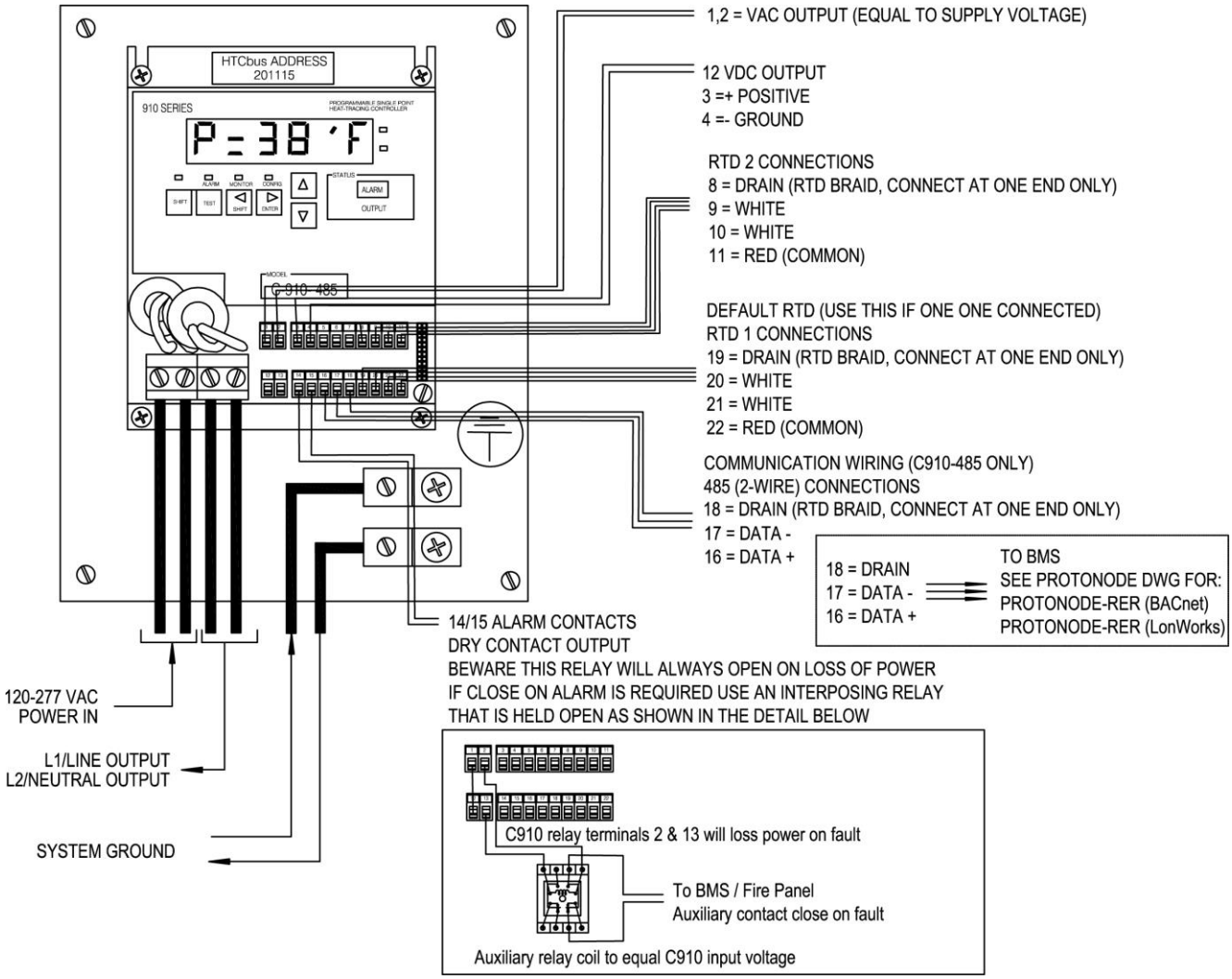

North America

Tel +1.800.545.6258
Fax +1.800.527.5703
thermal.info@nvent.com

Europe, Middle East, Africa

Tel +32.16.213.511
Fax +32.16.213.604
thermal.info@nvent.com

Asia Pacific

Tel +86.21.2412.1688
Fax +86.21.5426.3167
cn.thermal.info@nvent.com

Latin America

Tel +1.713.868.4800
Fax +1.713.868.2333
thermal.info@nvent.com

nVent

nVent.com

©2019 nVent. All nVent marks and logos are owned or licensed by nVent Services GmbH or its affiliates. All other trademarks are the property of their respective owners.
nVent reserves the right to change specifications without notice.

RAYCHEM-IM-H58415-C910series-EN-1910