WhisperValue® DC™
VENTILATION FAN

FV-0510VSL1

Specification Submittal Data / Panasonic Ventilation Fan/Light

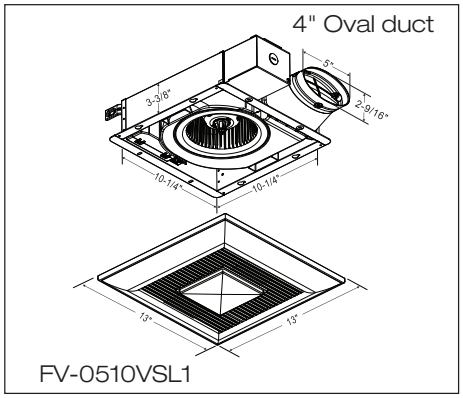

Description:

Ventilating fan/light shall be Low Noise ceiling or wall mount type rated for continuous run. Fan shall be ENERGY STAR® rated and certified by the Home Ventilation Institute (HVI). Evaluated by Underwriters Laboratories and conform to both UL and cUL safety standards.

Motor/Blower:

- Enclosed brushless ECM motor technology rated for continuous run.
- Fan ventilation rates shall be manually adjustable for 50-80-100 CFM.
- Power rating shall be 120 volts and 60 Hz.
- Fan shall be UL and cUL listed for tub/shower enclosure when GFCI protected and used in insulated ceiling (TYPE I.C.).
- PCB board equipped with thermal–cutoff fuse.
- Removable with permanently lubricated plug-in motor.

Housing:

- 26 gauge galvanized steel body.
- Built-in 4" Oval duct collar. Also compatible with 4" round duct.
- Optional 24 gauge steel, fire code rated 4" oval to 3" round duct adaptor sold separately (Model # FV-VS43R).
- Built in backdraft damper.
- Built-in metal flange provides blocking for penetrations through drywall as an Air Barrier, and assists with the decrease in leakage in the Building Envelope during blower door testing.
- Unique L-shaped bracket simplifies installation and provides strong support.

(1) 10 Watt Dimmable LED chip panel/3000 Kelvin Warm White/90CRI/700 lumens/70 LPW/ ENERGY STAR 2.0 certified/50,000 hours rated average life /<1W LED night light.

Ceiling Radiation Damper:

- WhisperValue DC is UL listed for use with the Panasonic FlexDamper® Ceiling Radiation Damper (Model #: PC-RD06C6, sold separately).

Grille:

- Attractive design using Poly Pro material.
- Attaches directly to housing with torsion springs.

Warranty:

- ECM Motor: 6 Years from original purchase date.
- LED: 5 Years from original purchase date.
- ALL Parts: 3 Years from original purchase date.

Architectural Specifications:

Ventilation fan/light shall be UL and cUL listed for ceiling or wall mount and tub/shower enclosure when GFCI protected. Fan/light shall also be ENERGY STAR® certified, with a built-in speed selector. Choose from 50 / 80 / 100 CFM and no more than <0.3 / 0.4 / 0.9 sone as certified by the Home Ventilating Institute (HVI) at 0.1 static pressure in inches water gauge (w .g.) with no less than 52 / 81 / 101 CFM and no more than 0.5 / 0.8 /1.3 sone as certified by HVI at 0.25 w.g, and 52 / 75 / 83 CFM at 0.375 w.g. Power Consumption shall be no greater than 4.5 / 8.5 / 12.4 watts at 0.1 w.g, 7.7 / 13.2 / 18.0 watts at 0.25 w.g, and 12.0 / 16.0 / 18.0 watts at 0.375 w.g. Efficiency should be no less than 12.1 / 10.0 /8.2 CFM/watt at 0.1 w.g, 7.3 / 6.5 / 5.7 CFM/watt at 0.25 w.g, and 4.3 / 4.7 / 4.6 CFM/watt at 0.375 w.g. The motor shall be totally enclosed with a brushless ECM motor engineered to run continuously. ECM motor speed shall automatically increase when the fan senses static pressure to maintain selected CFM. Power rating shall be 120V/60Hz. Lamp shall be of the LED dimmable type and be no less than (1) 10W, ENERGY STAR 2.0 certified, LED chip panel that maintains 50,000 hours rated average life and incorporates a <1W LED night light. Duct diameter shall be no less than 4". Optional 24-gauge steel, fire code rated 4" oval to 3" round duct adaptor sold separately (Model # FV-VS43R). Fan can be used to comply with ASHRAE 62.2, LEED, EarthCraft, California Title-24 and WA Ventilation Code.

Performance Curve 4" Oval duct

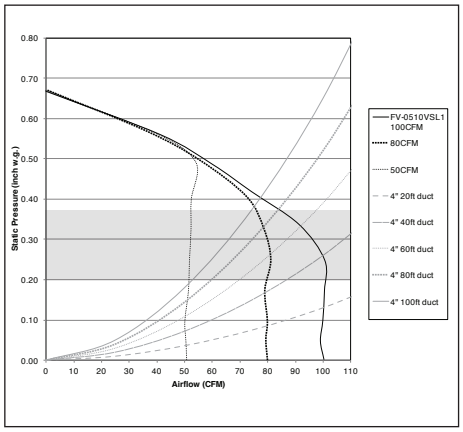

Specifications and additional features, including Dimmer Switch Compatibility, on following page.

For complete Installation Instructions visit **iaq.na.panasonic.com**

Model	Quantity	Comments	Project:
			Location:
			Architect:
			Engineer:
			Contractor:
			Submitted by:
			Date:

Panasonic

WhisperValue® DC™ VENTILATION FAN

FV-0510VSL1

Specification Submittal Data / Panasonic Ventilation Fan/Light
(Continued)

ECM Motor Technology
When the fan senses static pressure, its speed is automatically increased to ensure that the desired CFM is not compromised, which allows the fan to perform as rated.

Specifications: **WhisperValueDC** FV-0510VSL1		**4" Oval**			**4" Oval**			**4" Oval**		
Ventilation Fan Characteristics (HVI Certified Data)	Static Pressure in inches w.g.	0.1	0.25	0.375	0.1	0.25	0.375	0.1	0.25	0.375
	Air Volume (CFM)	100	101	83	80	81	75	50	52	52
	Noise (sones)	0.9	1.3	-	0.4	0.8	-	<0.3	0.5	-
	Power Consumption (watts)	13.4	18.0	18.0	8.5	13.2	16.0	4.5	7.7	12.0
	Energy Efficiency (CFM/Watt)	8.2	5.7	4.6	10.0	6.5	4.7	12.1	7.3	4.3
	Speed (RPM)	954	1176	1300	856	1114	1270	733	1050	1230
	Current (amps)	0.18	0.25	0.25	0.13	0.20	0.24	0.08	0.13	0.17
	MAX. Current (amps)	0.39								
	Power Rating (V/Hz)	120/60								
	ENERGY STAR rated	Yes								

***Industry research indicates static pressure in typical installations ranges from 0.20" to 0.375"**

Dimmer Switch Compatibility		
Brand	Model	Load
Lutron	DV-603P	600W
	S-600	
	S-600PR-WH	
Leviton	6684	600W
	6683	
	6631-LA	
	IPI06	
	S-600P	
GE	18024	600W
Almond	LUXDM600-12	600W
Top	HCL453PTC	600W
	HCL453PW	

Specifications: **WhisperValueDC** FV-0510VSL1		**4" Oval**		**4" Oval**		**4" Oval**	
Ventilation Fan Characteristics (HVI Certified Data)	Static Pressure in inches w.g.	0.1	0.25	0.1	0.25	0.1	0.25
	Air Volume (CFM)	100	101	80	81	50	52
	Noise (sones)	0.9	1.3	0.4	0.8	<0.3	0.5
	Power Consumption (watts)	12.4	18.5	8.5	13.2	4.5	7.7
	Energy Efficiency (CFM/Watt)	7.5	5.5	10.0	6.5	12.1	7.3
	Speed (RPM)	970	1197	856	1114	733	1050
	Current (amps)	0.22	0.29	0.13	0.20	0.08	0.13
	MAX. Current (amps)	0.39					
	Power Rating (V/Hz)	120/60					
	ENERGY STAR rated	YES					

Panasonic Life Solutions Company of America
IAQ Division
Two Riverfront Plaza
Newark, NJ 07102

iaq.na.panasonic.com

IAQ20193ST R2

Panasonic