Panasonic

WhisperValue® DC Ventilation Fans and Fan/Lights

WhisperValue® DC VENTILATION FAN

3-3/8" Depth

Single Pack (Fan Housing with Motor/Grille)
Fan Only Models: FV-0510VS1, FV-0810VSS1, FV-0510VSC1
Fan/Light Models: FV-0510VSL1, FV-0810VSSL1, FV-0510VSCL1

Contractor Pack (Fan Only Models)
FV-0510VSA1: Fan Housing 4-packs
FV-0510VSB1: Motor/Grille Assembly 4-packs
FV-0510VSCB1: Motor/Grille Assembly (Condensation) 4-packs
FV-0810VSSB1: Motor/Grille Assembly (Multi-Speed) 4-packs

True Flow

COMFORT STARTS WITH CLEAN AIR

True Flow ratings at **0.375"** static pressure provide powerful airflow to assure code compliant homes.

- Pick-A-Flow® Airflow Selector (50[1], 80 or 100 CFM) combined with SmartFlow™ technology simplifies the selection process and ensures optimum performance to meet code and reduce callbacks
- Optional built-in Multi-Speed Control for ASHRAE 62.2 compliance[2]
- Optional built-in Condensation Sensor to control moisture in the bathroom[3]
- Lighted models incorporate one 10W dimmable LED chip panel with <1W LED night light for warm, energy efficient illumination (night light must be wired separately)
- 3-3/8" Housing Depth – lowest profile ENERGY STAR® fan available – fits anywhere!
- Unique L-Shaped bracket simplifies installation and provides strong support
- UL approved for ceiling or wall mount (actually fits in a 2 x 4 stud wall)
- Wall Installation reduces cost by eliminating the need for a radiation damper when penetrating fire rated ceilings, making it ideal for Multi-Family applications
- Can be used to comply with ASHRAE 62.2, IAP, California Title 24, CALGreen[4] and WA Ventilation Code
- Available in two packages for convenience and cost efficiency: single and contractor pack

ADDITIONAL BENEFITS

- 24 gauge steel, fire code rated 4" oval to 3" round duct adapter, sold separately (model #FV-VS43R)
- Transfer Register Box (model #FV-JD, sold separately), provides room-to-room powered circulation with ductless heat pumps
- UL listed for use with the Panasonic FlexDamper® - ceiling radiation damper (model #PC-RD06C6)
- UL listed for tub/shower enclosure when GFCI protected
- Warranty[5]: 6 years ECM Motor, 5 years LED, 3 years all other parts

*Industry research indicates static pressure in typical installations ranges from 0.20" to 0.375"
[1] 50 CFM option not included in FV-0810VSS1 and FV-0810VSSL1
[2] FV-0810VSS1 and FV-0810VSSL1 only
[3] FV-0510VSC1 and FV-0510VSCL1 only
[4] FV-0510VSC1 and FV-0510VSCL1 only, or when other WhisperValue® DC models are combined with a Panasonic Condensation Sensor Plus(FV-WCCS1-W/A or FV-WCCS2-W/A)
[5] One year additional fan or fan/light warranty available when WhisperValue® DC is controlled by a Panasonic Condensation Sensor Plus.

ENERGY STAR

Installed Performance

ECM Motor with SmartFlow™ Technology

WhisperValue® DC is designed to perform as rated. When the fan senses static pressure, its speed is automatically increased to ensure optimal CFM output. This feature provides peace of mind, as the installer doesn't have to worry about compromising the fan's performance, even with a complicated duct run.

Pick-A-Flow Airflow Technology

Built-in Pick-A-Flow Airflow selector provides the unique ability to select your required airflow (50-80 -100 CFM) with the simple flip of a switch.

LED Lighting

WhisperValue® DC fan/light models feature a contemporary flush mount grille that incorporates one 10W Dimmable LED chip panel with <1W LED night light for warm, energy efficient illumination. Panel specifications include: 3000 Kelvin Warm White/90CRI/700 lumens/70 LPW/ ENERGY STAR 2.0 certified/50,000 hours rated average life.

Optional Built-In Controls

Multi-Speed for ASHRAE 62.2 Compliance (FV-0810VSS1 and FV-0810VSSL1 only)

Allows you to select the proper CFM settings to satisfy ASHRAE 62.2 continuous ventilation requirements. The fan runs continuously at a preset lower level (0, 30-70, in 10 CFM increments), then elevates to a maximum level of operation (80 or 100 CFM) when the wall switch is turned on.

Condensation Sensor (FV-0510VSC1 and FV-0510VSCL1 only)

Helps control bathroom condensation to prevent mold and mildew. Sensor technology detects relative humidity and temperature to anticipate dew point, automatically turning the fan on to control humidity. Built-in Relative Humidity (RH) sensitivity adjustment enables fine tuning for moist conditions and for satisfying CALGreen requirements. The fan will run for 20 minutes before turning off.

WhisperValue® DC is Offered in Two Convenient Packs

Single Pack: Housing and motor/grille assembly are packaged together. This easy-to-manage packaging allows contractors the convenience of having multiple components assembled in one box.

Contractor Pack: Housing and motor/grille assembly are packaged separately. This easy-to-manage packaging allows contractors to store the components separately without fear of parts getting lost or damaged on site.

WhisperValue® DC Single Package			
Model #	Description	Contents	Master Pack
FV-0510VS1	WhisperValue® DC Fan with Pick-A-Flow, 50-80-100 CFM	Housing, Duct Adapter, Junction Box, Motor and Grille	1
FV-0510VSC1	WhisperValue® DC Fan with Condensation Sensor	Housing, Duct Adapter, Junction Box, Motor and Grille	1
FV-0810VSS1	WhisperValue® DC Fan with Multi-Speed and Pick-A-Flow, 80/100 CFM	Housing, Duct Adapter, Junction Box, Motor and Grille	1
FV-0510VSL1	WhisperValue® DC Fan and Light with Pick-A-Flow, 50-80-100 CFM	Housing, Duct Adapter, Junction Box, Motor and Grille with Light	1
FV-0510VSCL1	WhisperValue® DC Fan and Light with Condensation Sensor	Housing, Duct Adapter, Junction Box, Motor and Grille with Light	1
FV-0810VSSL1	WhisperValue® DC Fan and Light with Multi-Speed and Pick-A-Flow, 80/100 CFM	Housing, Duct Adapter, Junction Box, Motor and Grille with Light	1

Optional WhisperValue® DC Universal Housing Contractor Packs			
Model #	Description	Contents	Master Pack*
FV-0510VSA1	Universal Housing	Housing, Duct Adapter and Junction Box	4
FV-0510VSB1	Fan Motor and Grille Assembly	Motor and Grille	4
FV-0510VSCB1	Fan Motor and Grille Assembly with Condensation Sensor	Motor, Grille and Condensation Sensor	4
FV-0810VSSB1	Fan Motor and Grille Assembly with Multi-Speed Sensor	Motor, Grille and Multi-Speed Sensor	4

*Must order in quantities of 4. Shipment will contain 1 box with 4 pieces of each item.

WhisperValue® DC
VENTILATION FAN

Single Pack
FV-0510VS1, FV-0810VSS1, FV-0510VSC1

Contractor Pack
FV-0510VSA1+FV-0510VSB1
FV-0510VSA1+FV-0510VSCB1
FV-0510VSA1+FV-0810VSSB1

True Flow 52 - 76 - 84 CFM — FV-0510VS1

True Flow 76 - 84 CFM — FV-0810VSS1

True Flow 52 - 76 - 84 CFM — FV-0510VSC1

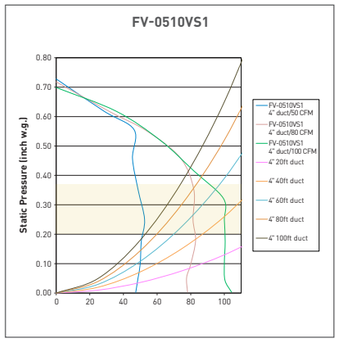

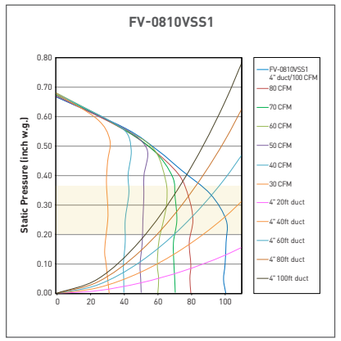

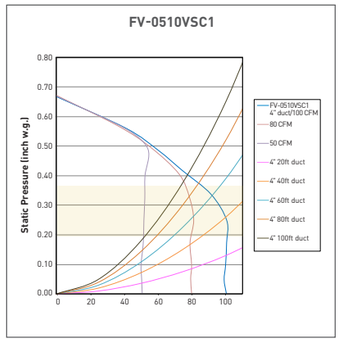

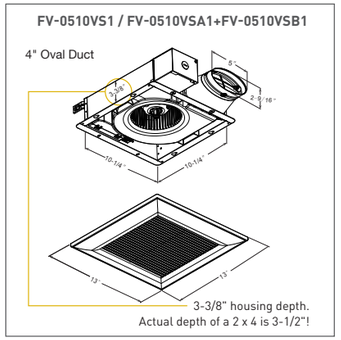

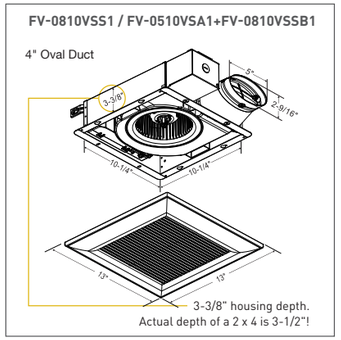

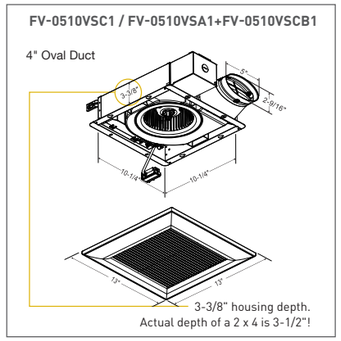

WhisperValue® DC 4" Oval Duct (Fan Only Models)

SPECIFICATIONS		FV-0510VS1									FV-0810VSS1																					FV-0510VSC1								
	Duct Diameter (Inches)	4 Oval			4 Oval			4 Oval			4 Oval			4 Oval			4 Oval			4 Oval			4 Oval			4 Oval			4 Oval			4 Oval			4 Oval			4 Oval		
Characteristics (HVI tested data for 0.1" S.P.)	Static Pressure in inches w.g.	0.1	0.25	0.375	0.1	0.25	0.375	0.1	0.25	0.375	0.1	0.25	0.375	0.1	0.25	0.375	0.1	0.25	0.375	0.1	0.25	0.375	0.1	0.25	0.375	0.1	0.25	0.375	0.1	0.25	0.375	0.1	0.25	0.375	0.1	0.25	0.375	0.1	0.25	0.375
	Air Volume (CFM)	100	100	83	80	81	75	50	53	52	100	101	83	80	81	75	70	72	70	60	64	65	50	52	52	40	41	42	30	31	30	100	101	83	80	81	75	50	52	52
	Noise (sones)	0.9	1.3	-	0.4	0.8	-	<0.3	0.5	-	0.9	1.3	-	0.4	0.8	-	<0.3	0.6	-	<0.3	0.6	-	<0.3	0.5	-	<0.3	0.5	-	<0.3	0.5	-	0.9	1.3	-	0.4	0.8	-	<0.3	0.5	-
	Power Consumption (watts)	11.1	16.0	18.0	7.2	11.5	16.0	4.4	7.5	12.0	12.4	18.0	18.0	8.5	13.2	16.0	6.5	10.8	15.0	5.3	9.3	13.0	4.5	7.7	12.0	3.8	6.7	10.0	3.4	6.0	9.0	12.4	18.0	18.0	8.5	13.2	16.0	4.5	7.7	12.0
	Energy Efficiency (CFM/Watt)	9.2	6.4	4.6	11.4	7.2	4.7	12.8	7.9	4.3	8.2	5.7	4.6	10.0	6.5	4.7	11.2	6.9	4.7	11.8	7.2	5.0	12.1	7.3	4.3	11.8	6.9	4.2	10.2	6.0	3.3	8.2	5.7	4.6	10.0	6.5	4.7	12.1	7.3	4.3
	Speed (RPM)	902	1121	1300	797	1070	1270	708	1025	1230	954	1176	1300	856	1114	1270	805	1088	1260	770	1076	1250	733	1050	1230	723	1037	1215	711	1033	1200	954	1176	1300	856	1114	1270	733	1050	1230
	Current (amps)	0.20	0.27	0.25	0.13	0.20	0.24	0.09	0.14	0.17	0.18	0.25	0.25	0.13	0.20	0.24	0.10	0.16	0.22	0.09	0.15	0.20	0.08	0.13	0.17	0.07	0.11	0.15	0.06	0.10	0.13	0.18	0.25	0.25	0.13	0.20	0.24	0.08	0.13	0.17
	MAX. Current (amps)	0.39									0.39																					0.39								
	Power Rating (V/Hz)	120/60									120/60																					120/60								
Specifications	Motor Type	ECM									ECM																					DC								
	Type of Motor Bearing	Ball									Ball																					Ball								
	Thermal Fuse Protection	Yes									Yes																					Yes								
	Blower Wheel Type	Sirocco									Sirocco																					Sirocco								
	ENERGY STAR Qualified	Yes									Yes																					Yes								
Installation	Duct Diameter (Inches)	4 Oval									4 Oval																					4 Oval								
	Mounting Opening (Inches sq.)	10-1/2									10-1/2																					10-1/2								
	Grille Size (Inches sq.)	13									13																					13								
Light Specifications	Lamp Watts	N/A									N/A																					N/A								
	Lumens (lm)	N/A									N/A																					N/A								
	Lumens Per Watt (LPW)	N/A									N/A																					N/A								
	Color Rendering Index	N/A									N/A																					N/A								
	Color Temperature (Kelvin)	N/A									N/A																					N/A								
	Rated Life (hours)	N/A									N/A																					N/A								
	Lamp Model #	N/A									N/A																					N/A								
	Type of Lamp Socket	N/A									N/A																					N/A								
Night Light Specs	Night Light Watts	N/A									N/A																					N/A								
Shipping	Gross Weight (lbs)	8.8									9.0																					9.0								
Approved Code/Standard/ Regulation	UL tub/Shower Enclosure	Yes									Yes																					Yes								
	Washington VIAQ Code	Yes									Yes																					Yes								
	California Title 24 Compliant	Yes									Yes																					Yes								
	Mfg in ISO 9001 Certified Facility	Yes									Yes																					Yes								

CALGreen

*Industry research indicates static pressure in typical installations ranges from 0.20" to 0.375".
As tested by an EPA recognized lab

SMART FLOW DC TECHNOLOGY

WhisperValue® DC

VENTILATION FAN

FV-0510VSL1
FV-0810VSSL1
FV-0510VSCL1

True Flow 52 - 76 - 84 CFM

FV-0510VSL1
FV-0810VSSL1
FV-0510VSCL1

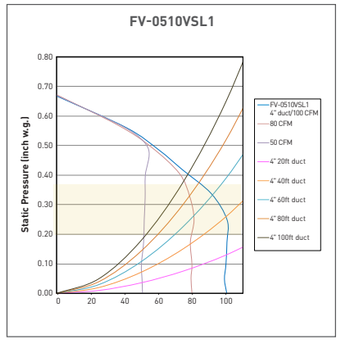

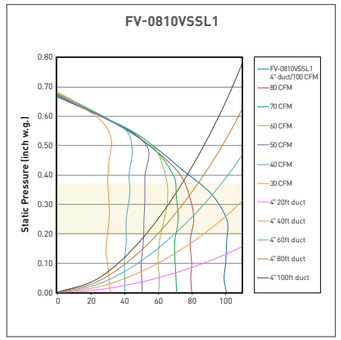

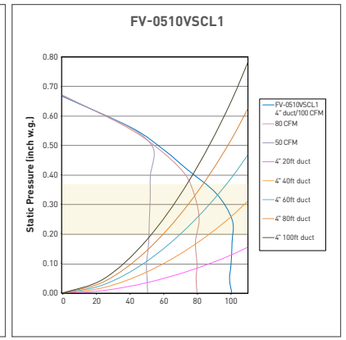

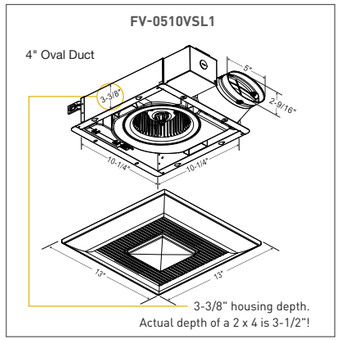

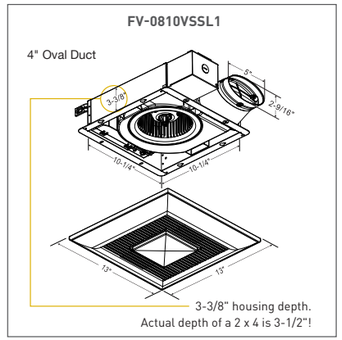

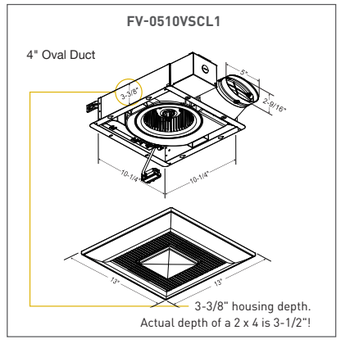

WhisperValue® DC 4" Oval Duct (Fan/LED Light Models)

SPECIFICATIONS		FV-0510VSL1									FV-0810VSSL1																					FV-0510VSCL1								
	Duct Diameter (Inches)	4 Oval			4 Oval			4 Oval			4 Oval			4 Oval			4 Oval			4 Oval			4 Oval			4 Oval			4 Oval			4 Oval			4 Oval			4 Oval		
Characteristics (HVI tested data for 0.1" S.P.)	Static Pressure in inches w.g.	0.1	0.25	0.375	0.1	0.25	0.375	0.1	0.25	0.375	0.1	0.25	0.375	0.1	0.25	0.375	0.1	0.25	0.375	0.1	0.25	0.375	0.1	0.25	0.375	0.1	0.25	0.375	0.1	0.25	0.375	0.1	0.25	0.375	0.1	0.25	0.375	0.1	0.25	0.375
	Air Volume (CFM)	100	101	83	80	81	75	50	52	52	100	101	83	80	81	75	70	72	70	60	64	65	50	52	52	40	41	42	30	31	30	100	101	83	80	81	75	50	52	52
	Noise (sones)	0.9	1.3	-	0.4	0.8	-	<0.3	0.5	-	0.9	1.3	-	0.4	0.8	-	<0.3	0.6	-	<0.3	0.6	-	<0.3	0.5	-	<0.3	0.5	-	<0.3	0.5	-	0.9	1.3	-	0.4	0.8	-	<0.3	0.5	-
	Power Consumption (watts)	12.4	18.0	18.0	8.5	13.2	16.0	4.5	7.7	12.0	12.4	18.0	18.0	8.5	13.2	16.0	6.5	10.8	15.0	5.3	9.3	13.0	4.5	7.7	12.0	3.8	6.7	10.0	3.4	6.0	9.0	13.4	18.0	18.0	8.5	13.2	16.0	4.5	7.7	12.0
	Energy Efficiency (CFM/Watt)	8.2	5.7	4.6	10.0	6.5	4.7	12.1	7.3	4.3	8.2	5.7	4.6	10.0	6.5	4.7	11.2	6.9	4.7	11.8	7.2	5.0	12.1	7.3	4.3	11.8	6.9	4.2	10.2	6.0	3.3	8.2	5.7	4.6	10.0	6.5	4.7	12.1	7.3	4.3
	Speed (RPM)	954	1176	1300	856	1114	1270	733	1050	1230	954	1176	1300	856	1114	1270	805	1088	1260	770	1076	1250	733	1050	1230	723	1037	1215	711	1033	1200	954	1176	1300	856	1114	1270	733	1050	1230
	Current (amps)	0.18	0.25	0.25	0.13	0.20	0.24	0.08	0.13	0.17	0.18	0.25	0.25	0.13	0.20	0.24	0.10	0.16	0.22	0.09	0.15	0.20	0.08	0.13	0.17	0.07	0.11	0.15	0.06	0.10	0.13	0.18	0.25	0.25	0.13	0.20	0.24	0.08	0.13	0.17
	MAX. Current (amps)	0.39									0.39																					0.39								
	Power Rating (V/Hz)	120/60									120/60																					120/60								
Specifications	Motor Type	ECM									ECM																					ECM								
	Type of Motor Bearing	Ball									Ball																					Ball								
	Thermal Fuse Protection	Yes									Yes																					Yes								
	Blower Wheel Type	Sirocco									Sirocco																					Sirocco								
	ENERGY STAR Qualified	Yes									Yes																					Yes								
Installation	Duct Diameter (Inches)	4 Oval									4 Oval																					4 Oval								
	Mounting Opening (Inches sq.)	10-1/2									10-1/2																					10-1/2								
	Grille Size (Inches sq.)	13									13																					13								
Light Specifications	Lamp Watts	10.0									10.0																					10.0								
	Lumens (lm)	700									700																					700								
	Lumens Per Watt (LPW)	70									70																					70								
	Color Rendering Index	90									90																					90								
	Color Temperature (Kelvin)	3,000									3,000																					3,000								
	Rated Life (hours)	50,000									50,000																					50,000								
	Lamp Model #	N/A									N/A																					N/A								
	Type of Lamp Socket	LED chip									LED Chip																					LED chip								
Night Light Specs	Night Light Watts	0.2									0.2																					0.2								
Shipping	Gross Weight (lbs)	9.9									9.9																					9.9								
Approved Code/Standard/ Regulation	UL tub/Shower Enclosure	Yes									Yes																					Yes								
	Washington VIAQ Code	Yes									Yes																					Yes								
	California Title 24 Compliant	Yes									Yes																					Yes								
	Mfg in ISO 9001 Certified Facility	Yes									Yes																					Yes								

CALGreen

*Industry research indicates static pressure in typical installations ranges from 0.20" to 0.375".
As tested by an EPA recognized lab

SMART FLOW DC TECHNOLOGY

ENERGY STAR

c UL us

2100 HVI CERTIFIED

Design and specifications subject to change without notice.

Panasonic
IAQ Division

Two Riverfront Plaza
Newark, NJ 07102

iaq.na.panasonic.com

Order Information

PHONE: 866-292-7299
FAX: 888-553-0723

ventfans@us.panasonic.com

IAQ26062SS-C