WhisperFit® DC
VENTILATION FAN

FV-0511VF1

Specification Submittal Data / Panasonic Ventilation Fan

3" or 4" Duct

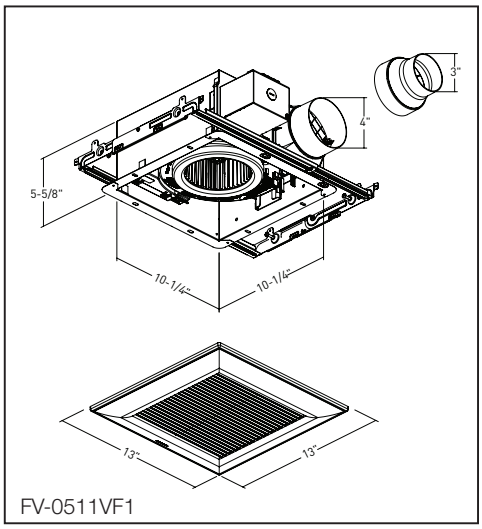

Description:

Ventilating fan shall be low sone ceiling mount rated for continuous operation. Fan shall be ENERGY STAR® rated and certified by the Home Ventilating Institute (HVI). Evaluated by the Underwriters Laboratories and conform to UL standards.

Motor/Blower:

- Four–pole totally enclosed condenser ECM motor rated for continuous use.
- Fan ventilation rates shall be manually adjustable for 50, 80, or 110 CFM.
- Power Rating shall be 120 volts and 60 Hz.
- Fan shall be UL listed for tub/shower enclosure when GFCI protected.
- Motor equipped with thermal cutoff fuse.
- Removable, permanently lubricated, plug-in motor.
- ECM Motor with SmartFlow Technology

Housing:

- Rust proof epoxy and polyester resin coating, 26 gauge galvanized steel body.
- 4" diameter duct with optional 3" adapter included.
- Built in backdraft damper.
- Articulating and expandable extension bracket up to 24".

Ceiling Radiation Damper:

- WhisperFit DC is UL listed for use with the Panasonic FlexDamper®- ceiling radiation damper (Model # PC-RD06C6, sold separately).

Grille:

- Attractive design using Poly Pro material.
- Attaches directly to housing with torsion springs.

Warranty:

- 6-year warranty ECM motor, 3-year warranty on parts

Architectural Specifications:

Customizable Ventilation fan shall be ceiling mount, ENERGY STAR® rated with built-in speed selector. Select from 50/80/110 CFM with <0.3/<0.3/0.8 sone as certified by the Home Ventilating Institute (HVI) at 0.1 w.g. with 50/80/110 CFM and no more than 0.4/0.8/1.2 sones at 0.25 w.g. and 50/84/109 CFM at 0.375 w.g. Power Consumption shall be no greater than 4.0/5.9/10.2 watts at 0.1 w.g. and 7.1/9.4/14.6 watts at 0.25 w.g. and 10.0/13.2/17.9 watts at 0.375 w.g. ENERGY STAR® rated with efficiency of no less than 13.5/13.9/11.0 CFM/watt at 0.1 w.g. and 7.6/8.7/7.7 CFM/watt at 0.25 w.g. and 5.4/6.5/6.2 CFM/watt at 0.375 w.g. Duct diameter shall be no less than 4" (3" if using the included duct adapter). The motor shall be enclosed with brushless ECM motor engineered to run continuously. Power rating shall be 120v/60Hz. Housing material shall be no less than 26-gauge galvanized steel with rust proof epoxy and polyester resin coating. Fan shall be UL listed for tub/shower enclosure when GFCI protected. Fan can be used to comply with ASHRAE 62.2, LEED, ENERGY STAR® IAP, Earth Craft, and California Title 24.

Specifications: **WhisperFit® DC** FV-0511VF1		**4" Duct**			**4" Duct**			**4" Duct**			**3" Duct**			**3" Duct**			**3" Duct**		
Ventilation Fan Characteristics (HVI-Certified Data)	Static Pressure in inches w.g.	0.1	0.25	0.375	0.1	0.25	0.375	0.1	0.25	0.375	0.1	0.25	0.375	0.1	0.25	0.375	0.1	0.25	0.375
	Air Volume (CFM)	110	111	109	80	80	84	50	50	50	110	94	69	80	81	67	50	51	55
	Noise (sones)	0.8	1.2	-	0.3	0.8	-	<0.3	0.4	-	2.0	1.5	-	0.8	1.4	-	<0.3	0.9	-
	Power Consumption (Watts)	10.2	14.6	17.9	5.9	9.4	13.2	4.0	7.1	10.0	17.1	16.4	13.6	8.8	13.0	13.5	4.6	7.7	10.8
	Energy Efficiency (CFM/Watt)	11.0	7.7	6.2	13.9	8.7	6.5	13.5	7.6	5.4	6.6	5.9	5.2	9.4	6.5	5.2	11.5	7.0	5.3
	Speed (RPM)	977	1222	1392	820	1142	1349	795	1152	1374	1341	1429	1476	1094	1357	1476	870	1205	1426
	Current (amps)	0.18	0.24	0.28	0.11	0.16	0.22	0.08	0.13	0.17	0.27	0.26	0.22	0.15	0.21	0.22	0.09	0.14	0.18
	MAX. Current (amps)	0.29																	
	Power Rating (V/Hz)	120/60																	
	ENERGY STAR® Qualified	Yes																	

For complete Installation Instructions visit **iaq.na.panasonic.com**

Model	Quantity	Comments	**Project:**
			Location:
			Architect:
			Engineer:
			Contractor:
			Submitted by:
			Date:

Panasonic Life Solutions Company of America
IAQ Division
Two Riverfront Plaza
Newark, NJ 07102

iaq.na.panasonic.com

Panasonic

IAQ25404ST

Performance Curve FV-0511VF1 - 4” Duct

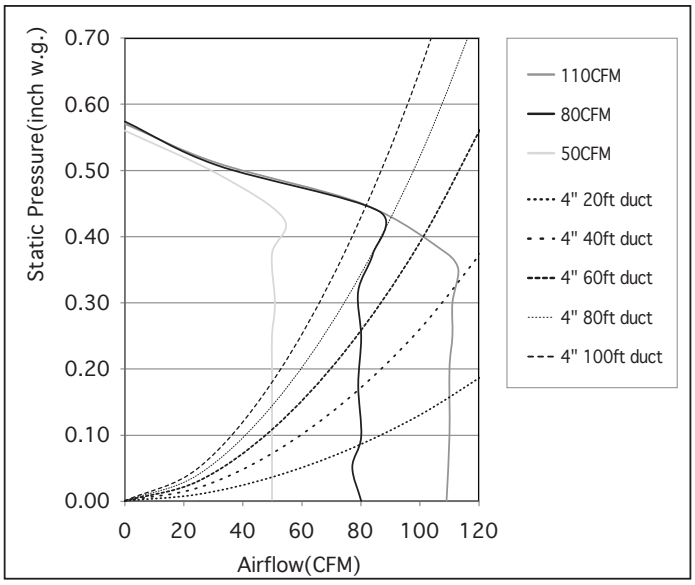

Performance Curve FV-0511VF1 - 3” Duct

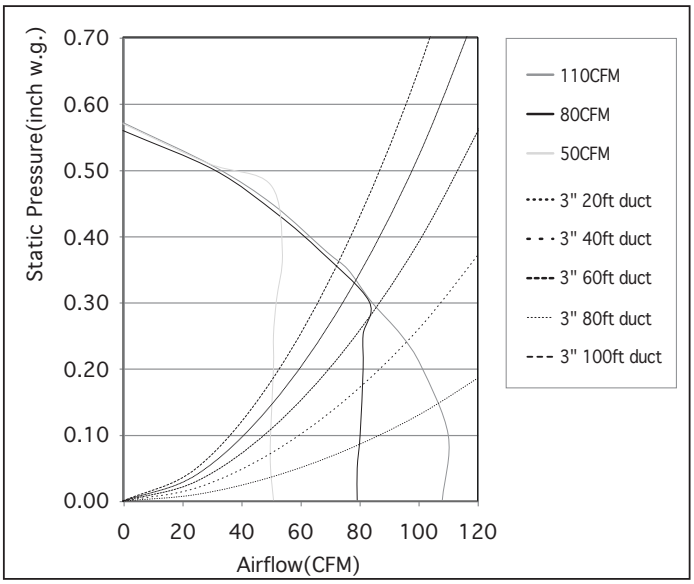

For complete Installation Instructions visit **us.panasonic.com/ventfans**

Model	Quantity	Comments	Project:
			Location:
			Architect:
			Engineer:
			Contractor:
			Submitted by:
			Date:

Panasonic Life Solutions Company of America
IAQ Division
Two Riverfront Plaza
Newark, NJ 07102

iaq.na.panasonic.com

Panasonic