Effective October 23, 2019

Imported By:

390 EAGLE DR.
WINNIPEG, Manitoba
CANADA R3C 2E6
Toll Free: 1-800-665-8089
Ph#: 204-779-7791
Fax#: 204-779-7796
Email: sales@empire-machinery.com
Web: www.empire-machinery.com

Instruction & Parts Manual for

EMT-7R

Power Rotary Swaging Machine

Operator must read and understand Instruction Manual prior to operating the EMT-7R Power Rotary Machine, as damage to machine or personal injury may result.

Electrician must refer to electrical schematics in this manual before initial startup.

To see videos, please visit:
www.empire-machinery.com/videos

ROTARY/SWAGING MACHINE SAFETY RULES

- EMT-7R machine should be DISCONNECTED from power source before servicing.
- Never place any part of the body including loose clothing near or onto the rotating rolls. (KEEP HANDS AWAY). Failure to follow this procedure will lead to personal body injury.
- Never clean forming rolls while they are rotating.
- Do not exceed specified material capacity of the machine.
- Machine must be operated by authorized personal who have been trained in regard to working and safety features of the machine.

All operators must read and understand the Operators Manual.

- Never operate machine with gloves as the rotating seam or rough edge may catch on the glove material and pull hand in the rolls.
- Do not use machine if service is required.
- Use safety glasses at all time when operating EMT-7R.
- Keep work areas clean and tidy to eliminate possible tripping hazards.

It is the responsibility of the owner of this machine and shop supervisor to ensure that all operators of this machine are properly trained on the safe operation of this machine and to require that this manual including the above Safety Rules are read by all machine operators prior to operating.

If any of the EMT-7R safety labels are missing from the machine or damaged, it is the owner's responsibility to contact Empire Machinery & Tools Ltd. immediately for replacement labels. See sample labels – OVER -)

If any of these EMT-7R safety labels are missing from the machine or damaged, it is the owner's responsibility to contact Empire Machinery & Tools Ltd. immediately for replacement labels.

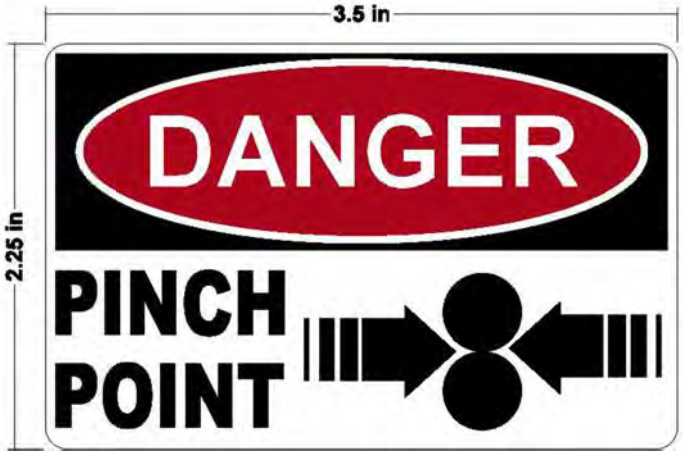

START UP/OPERATION INSTRUCTIONS

WIRING

Prior to electrical hookup please refer to Wiring Schematic on next page.

CLEANING

Remove the factory applied rust inhibitor with a degreasing agent or oil-soaked rags.

LUBRICATION

Check gearbox Oil Sight Glass (2) for proper oil levels
The following tables will provide you with manufacturers and types of oil and grease recommended by the factory.

Lubricate all points as marked with the proper grease using the fitting included in this information package.

US GREASE & OIL SPECIFICATIONS

BRAND	GREASE	OIL
US Mobil Brand	Mobilux Grease 2	Mobil DTE 24
Shell OilUS Product Info#1-800-231-6950	Alvania EP2Alvania Grease 2	Shell Tellus 32
Esso	Lonax/Lidok EP2	Nuto H32

CANADIAN GREASE & OIL SPECIFICATIONS

BRAND	GREASE	OIL
Nemco Available in Winnipeg, Regina, Saskatoon	LCEP2	Hydrol AW32
Shell Canada	Alvania EP2Alvania Grease 2	Shell Tellus 32
Esso	Lonax/Lidok EP2	Nuto H32

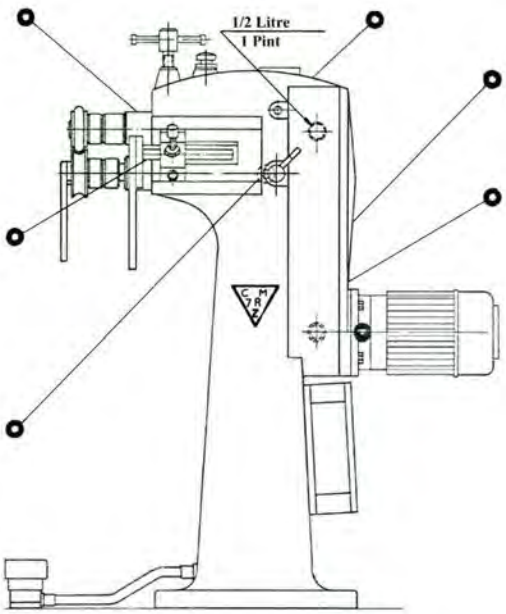

Change Gearcase oil every 2000 hours (Use 80W90 Gear Oil)

Grease daily using standard grease gun with special grease needle fitting supplied.

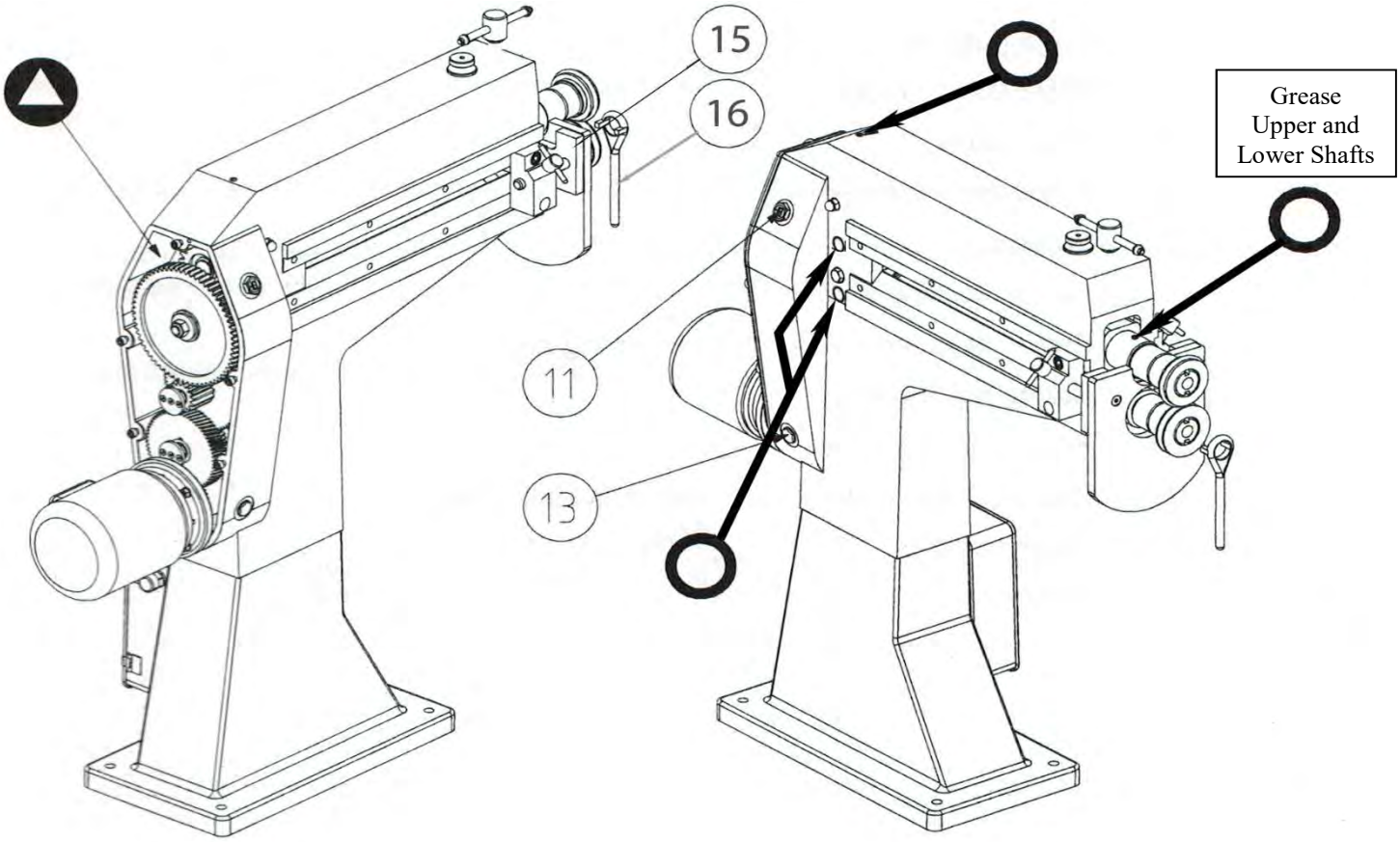

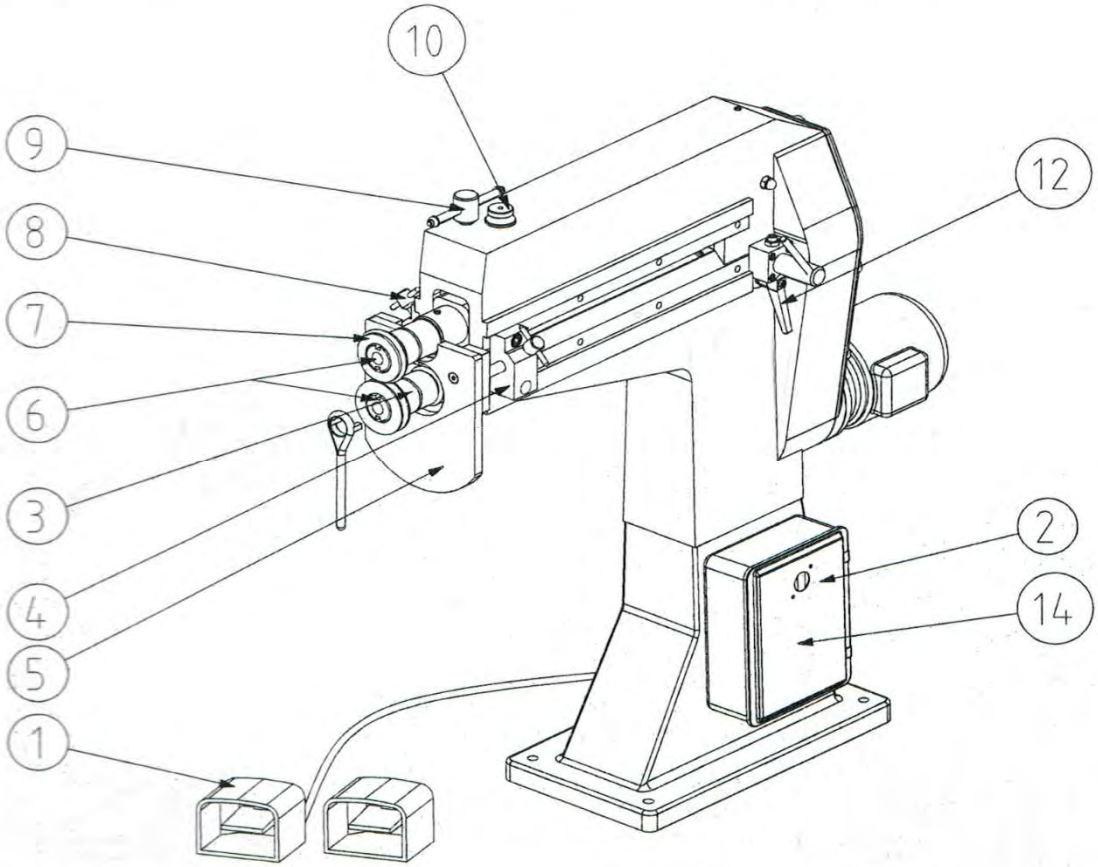

General Description of Controls

1	Foot Pedal (Single or Forward/Reverse
2	Main Disconnect Switch
3	Roll Shaft Spacing Collar
4	Back Gauge Guide Rod Support
5	Back Gauge
6	Roll Locking Nuts, LH & RH
7	Profile Forming Rolls
8	Guide Rod Locking T-Handle
9	Manual T-Handle Top Shaft Actuator
10	Top Shaft Return Tension Control Nut
11	Gearcase Oil Fill hole
12	Lower Shaft Slide Bearing Locking Bolt
13	Gearcase Oil Sight glass
14	Main Electrical Cabinet
15	Back Gauge Support Bracket
16	Rollnut Locking Wrench

ELECTRICAL INSTALLATION

EMT-7R Power Rotary Machine Must Be Installed by a Certified Electrician

Please see wiring schematics for proper location to run your power lines to.
(FAILURE TO WIRE ACCORDING TO WIRING SCHEMATICS WILL RESUT IN INVERTER DAMAGE)

EMT-7R (1HP) AMPERAGE DRAWS

	110V 1PH	**220V 1PH**	**220V 3PH**	**440V 3PH**
Amperage Draw	16 amps	10 amps	3.4 amps	1.6 amps

ROLL INSTALLATION

The EMT-7R comes with a lower shaft adjustment (14) so rolls with differing centerlines can be lined up. Loosen the locking screw on the right-hand side of the unit (12) and then bring the rolls together. Once the rolls have fit snugly together firmly lock the shaft in place.

THROAT GAUGE ADJUSTMENT

The EMT-7R is fitted with adjustable Throat Gauge Guides. For operation of machine where limited throat gauge depth is required the guides should be located to the front of the of the shafts. Where deeper operations are required the Throat Gauge Guides must be removed and placed in their proper locations near the back of the shafts.

DEPTH CONTROL

The EMT-7R comes standard with a manual screw adjustment for control of the upper shaft depth. (9). If you look directly behind the Adjusting Screw you will see the Upper Shaft Tensioning Screw (10). This is factory set and should never need adjustment.

ROLL INSTALLATION

Rolls must be secured by means of the Roll Locking Nuts (5) provided.
Upper Roll Lock Nut is Left Hand Thread and the Lower Roll Lock Nut is Right Hand Thread.
Failure to secure rolls will result in roll and shaft damage and will void all factory warranties.

EMT-7R comes with a set of 3/8” Single Bead Rolls as standard.
(We will quote on any roll application you may require)

SPEED CONTROL

Your EMT-7R is equipped with a Speed Control and Forward/Reverse Switch. Forward/Off/Reverse Switch must be in either Forward or Reverse position to operate. Machine will only run if foot pedal is depressed. Operator should never switch between forward and reverse while the rolls are turning as damage may occur. Speed may be adjusted while rolls are turning.

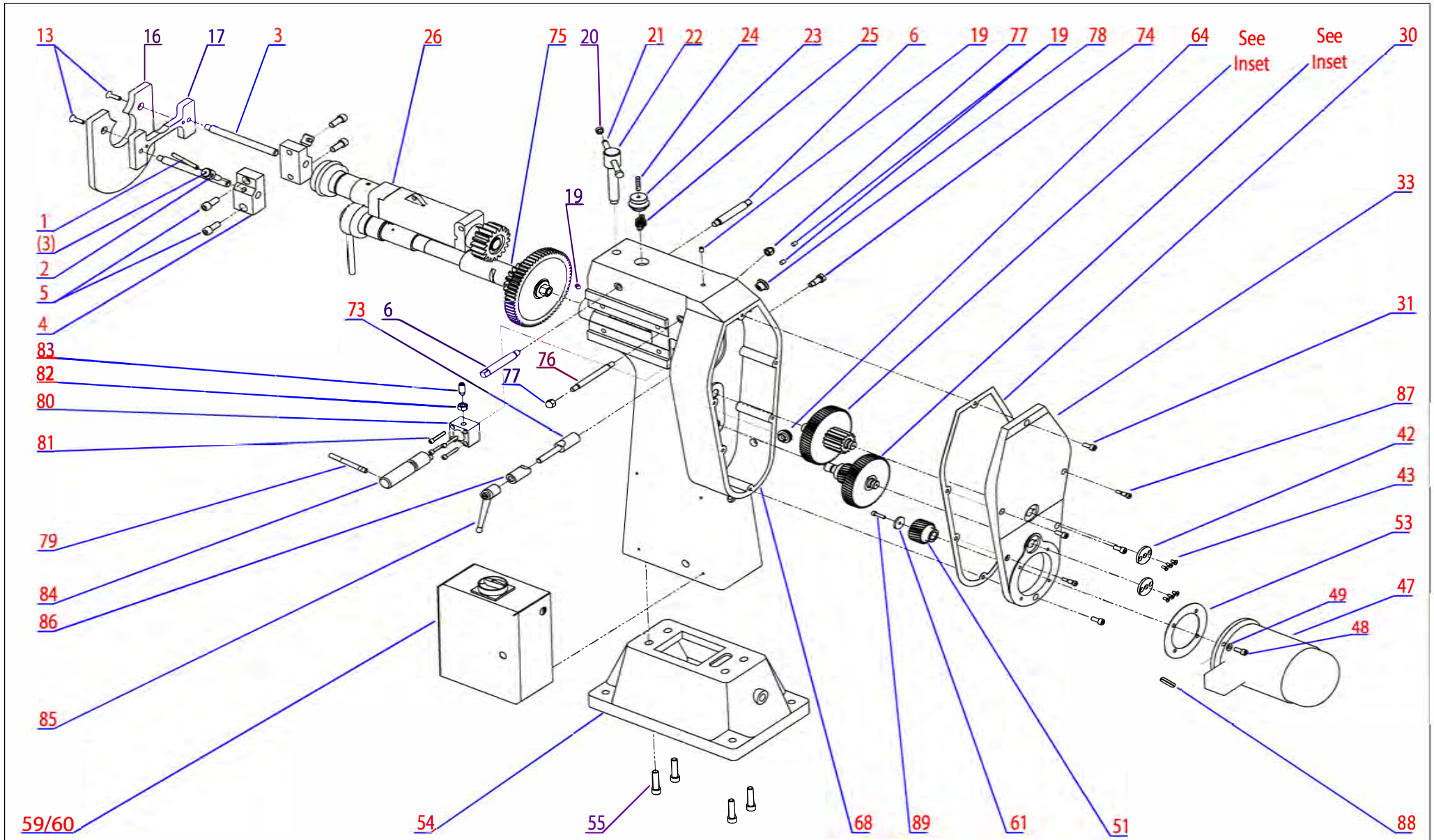

Idler Shaft & Gear Assy. (UPPER)

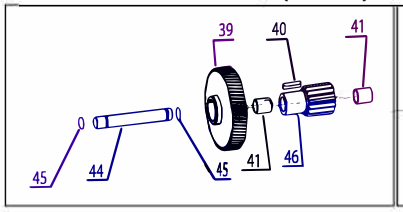

Idler Shaft & Gear Assy. (LOWER)

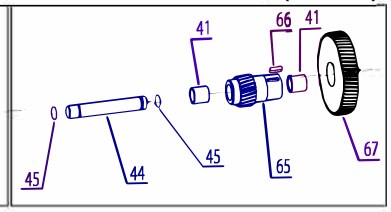

390 Eagle Drive
Winnipeg, MB
R3C 2E6
Canada

PH# 800-665-8089

www.em-pro.com

EMT-7R

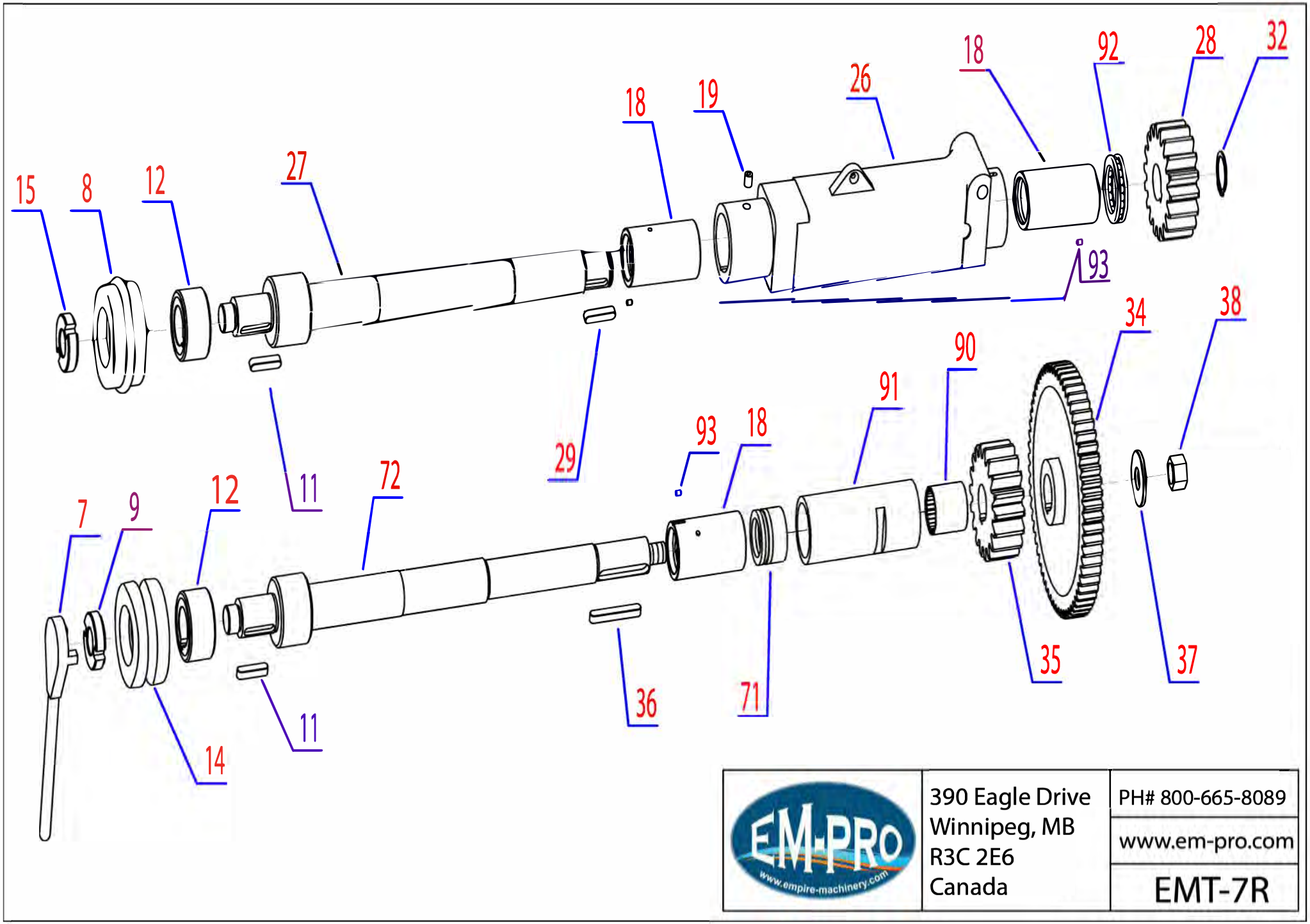
15
8
12
27
18
19
26
18
92
28
32
93
34
38
90
91
93
18
29
11
72
12
9
7
35
37
36
71
11
14
EM-PRO
www.empire-machinery.com
390 Eagle Drive
Winnipeg, MB
R3C 2E6
Canada
PH# 800-665-8089
www.em-pro.com
EMT-7R

Item #	Part#	Old Part# CM&-7R	Description	QTY	Details
1, 2, (3)	70002	00320 & 00321	Locking T Handle c/w Set Screw (Guide Rod)	2	
3	70003	00418	Guide Rods for Front Face Plate (LONG)	2	
4	70004	00312	Guide Rod Support Block	2	
5	70005	350.15.00975	Bolt, Guide Rod Mounting Bracket	4	M12 x 30mm
6	70006	00418A	Guide Rods for Front Face Plate (SHORT)	2	
7	70007	00324A	Roll Nut Wrench	1	
8 & 14	37000	3/8' Single Bead	Factory Installed 3/8" Single Bead Rolls	Pair	
9	70009	00322	RH (Lower) Roll Nut	1	
11	70010	350.18.00385	Upper and Lower Shaft Key	2	8mm x 35mm
12	70011	00313	Shaft Spacing Collar	2	
13	70012	350.15.03317	Counter Sunk Bolt, Factory Face Plate	2	M8 X 1.25 x 30mm
15	70013	00323	LH (Upper) Roll Nut	1	
16	70014	00311	Backgauge Plate	1	
17	70015	00419	Mounting Bracket, Backgauge Plate	1	
18	70016	00421	Bronze Bushing (Oil Holes Must Be Drilled After Being Pressed In)	3	
19	70017	350.20.0326	Spring Loaded Ball Lubricator (Requires Special Grease Gun Fitting)	5	E3
20	70018	00315A	T Handle (Sold as Assembly Only)	1	
21					
22					
23	70019	00316	Top Shaft Return Tension Nut	1	
24	70020	00317	Top Shaft Return Adjusting Screw	1	
25	70021	00327	Top Shaft Return Spring	1	
26	70022	00402	Top Shaft Pivot Block (Does Not Include Bearings or Bushings)	1	
27	70023	00425	Top Shaft	1	
28	70024	00429	Top Shaft Gear	1	
29	70025	350.18.00365	Key, Top Shaft Gear	1	8mm x 28mm
30	70026	00437	Gasket, Gearbox Cover	1	
31	70027	350.15.00495	Bolt, Gearcase Cover	4	M8 x 20mm
32	70028	350.15.0643	Snap Ring, Top Shaft	1	
33	70029	00406A	Gearbox Cover	1	
34	70030	00410	Gear, Lower Shaft (Large)	1	
35	70031	00427	Gear, Lower Shaft (Small)	1	
36	70032	350.18.0042	Key, Lower Shaft Gear	1	8mm x 7mm x 60mm

Item #	Part#	Old Part# CM&-7R	Description	QTY	Details
37	70033	00435	Washer, Lower Shaft	1	
38	70034	350.15.0513	Nylon Lock Nut, Lower Shaft	1	M16
39	70035	00408A	Gear	1	
40	70036	350.18.0042	Key	1	6mm x 6mm x 28mm
41	70037	00420	Bushing, Idler Shaft	4	
42	70038	00446	Idler Shaft End Cover	2	
43	70039	350.15.0324	Countersunk Bolt	6	M5 x 12
44	70040	00428A	Idler Shaft	2	
45	70041	350.21.0088	O-Ring, Idler Shaft	4	ID 15.54mm x 2.62 (NBR 70)
46	70042	00409A	Gear	1	
47	70043	350.02.0001	Motor, 1800 RPM, 230/460/3/60, 1HP		
48	70044		Bolt, Motor Flange	4	M8
49	70045		Washer, Motor Bolt	4	M8
51	70046	00404	Gear, Motor	1	
53	70047	00438	Gasket, Motor Flange	1	
54	70048	00411	Base	1	
55	70049	350.15.0193	Bolt, Base Mount	4	M12 x 50mm
59, 60	70050	500.02.0142 500.01.0143	Electrical Cabinet c/w Backing Plate	1	
61	70051	00345	Washer, Motor Shaft	1	
64	70052	350.19.0030	Sight Glass, Gear Oil	1	M20 x 1.5mm
65	70053	00407A	Gear	1	
66	70054	350.18.0036	Key	1	6mm x 6mm x 20mm
67	70055	00405A	Gear, Lower Idler Shaft (LARGE)	1	
68	70056	00401A	Frame, EMT-7R	1	
71	70057	350.04.0114	Bearing, Cylindrical Bearing (Front)	1	NX30-Z-XL
72	70058	00426	Lower Shaft	1	
73	70059	00432	Locking Sleeve, Cylindrical Bearing (Male)	1	
74	70060	00431	Bolt, Cylindrical Bearing (Rotation Prevention)	1	
75	70061	00403A	Cylindrical Bearing Assy. c/w Bearings, #71, #90	1	
76	70062	00340A	Pivot Shaft, Top Shaft Pivot Block	1	
77	70063	350.15.05788	Acorn Nut	2	M10
78	70064	350.19.0058	Cap, Oil Fill Hole	1	

Item #	Part#	Old Part# CM&-7R	Description	QTY	Details
79	70065	00337	Handle, Lower Shaft Adjuster	1	
80	70066	00445	Block, Lower Shaft Adjuster	1	
81	70067	350.15.00335	Bolt, Lower Shaft Adjustor Block	4	M6 x 40mm
82	70068	350.15.0574	Jam Nut	1	M12
83	70069	350.15.04974	Set Screw	1	M12 x 30mm
84	70070	00415	Eccentric, Lower Shaft Adjuster	1	
85	70071	350.19.0025	Clamping Handle (Lower Shaft)	1	M12 Female Thread
86	70072	00433	Locking Sleeve, Cylindrical Bearing (Handle Side)	1	
87	70073		Custom Shoulder Bolt (Alignment)	2	
88	70074		Key, Motor Shaft	1	6mm x 28mm
89	70075		Bolt, Motor Shaft	1	M6 x 25mm
90	70076	350.04.0164	Bearing, Cylindrical Bearing Rear	1	HK3038-ZW
91	70077		Cylindrical Bearing (Sleeve Only)	1	
92	70078		Thrust Bearing, Top Shaft Pivot Block	1	51106
93	70079		Set Screw, (Bushing Rotation Prevention)	3	M4 x 6mm

			Replacement Parts for Accessory Options		
100	71003		Replacement Hydraulic Cylinder c/w Fittings	1	
101	71004		Replacement Hydraulic Pump (OLD STYLE)	1	
102	71005		Replacement Hydraulic Pump c/w Internal Overload	1	
103	71006		Circuit Board, Main	1	
104	71007		Circuit Board, Switch (Potentiometer, Fwd/Rev, Pendant/Pedal)	1	
105	71008		Circuit Board, Automated Control	1	
106	71009		Variable Speed Food Pedal	1	G700-5K-S
107	71010		Foot Pedal, 2-Stage, Single	1	G502-MO-2S-HA
108	71011		Foot Pedal, Forward Reverse, (2-Stage on Left, Standard on Right)	1	DG502-MO-2S/G500-MO-OC
109	71012		Air Valve (Air Cylinder) (Fittings not included)	1	411A-BOA-DM-DJCJ-1KD
110	71013		Air Valve Assy (Hydraulic Cylinder) c/w Fittings	1	461A Valve and F-R-L Assembly
111	71014		Mounting Bracket for Automated Control Arm	1	

Optional Forming Rolls

Item#	Description
37001	Single Bead Rolls, (3/16")
37002	Single Bead Rolls, (1/4")
37003	Single Bead Rolls, (1/2")
37004	3/8" Single Bead Rolls for Small Diameter Pipe (Minimum Pipe Diameter 2-5/8")
37005	1/4" Ogee Bead Rolls (Double Bead, One Up and One Down)
37006	3/8" Bead (Combination Bead & Crimp for Light or Heavy Gauge Crimp Rolls)
37007	Crimping Rolls Heavy Gauge (16GA/18GA) (Maximum 1-1/2" Wide Crimp)
37008	Crimping Rolls Light Gauge (20GA & Lighter) (Maximum 1-1/2" Wide Crimp)
37009	1/4" 90 Degree Flanging Rolls (Pipe Stays in Horizontal Position)
37010	1/2" 90 Degree Flanging Rolls (Flange 16 GA Stainless), (Pipe Stays in Horizontal Position)
37011	1/2" Offset Rolls
37022	1" Offset Rolls (Bell & Spigot)
37012	Burring Rolls
37013	Flattening Rolls (Smooth Face)
37014	Flattening Rolls (Knurled Face)
37015	Spin-In Collar Roll Set (22GA & lighter) (Makes perfectly round spin-ins with deep pocket)
37016	Conical Roll for Spin-In Collar Roll Set (Must have Spin-In Collar Roll Set)
37017	Slitting Rolls
37018	Tap In (Starter Collar) Rolls
37019	Elbow Edging (Adjustable Elbows) (Straight V Style)
37020	Elbow Edging (Adjustable Elbows) (Brown Boggs Style)
37021	Saddle Tap Rolls **(WILL NOT WORK WITH AIR CYLINDER TOP SHAFT CONTROL)**

Optional Accessories

Item#	Description
38001	Backstop Plate 20" x 20" c/w Two Adj. Bearing Guides (Made from HARDOX 400 Armor Plate)
38002	Base Stand (Raises Working Height From 31-1/2 to 42”)
38003	Spring Loaded Pipe Support Stand (Ideal when working with longer lengths of pipe)

Retrofit Packages (Only Available for New Style Circuit Board Machines with S/N's ending with CB)

Item#	Description
39001	Forward/Reverse Foot Pedal (Convert hand operated machine with a single foot pedal to Fwd./Rev Foot Pedal)
39005	Hydraulic Cylinder (FWD/REV Foot Pedal & Pendant Control c/w Adjustable Depth Stop)
39006	Hydraulic Cylinder (Automated Control (Manual & Semi-Auto) c/w Adjustable Depth Stop)

Air Cylinder Top Shaft Option (39003)

Hydraulic Cylinder Top Shaft Option (39005) Fwd/Rev Foot Pedal

Hydraulic Cylinder Top Shaft Option with Automated Control System (39006) Fwd/Rev Foot Pedal

Offset Rolls

- With large spacers on the top and bottom shafts install the male offset roll on the top shaft and the female offset roll on the bottom shaft
- Tighten locking collars.
- Bring top shaft down until rolls are just touching.
- Loosen locking screw on the bottom shaft and adjust the bottom roll until there is about 2 times material thickness between the male and female portion of the rolls.
- Adjust the backstop up to the back of the bottom roll so it is almost touching the roll but not rubbing and lock in place.
- Place material onto the bottom roll and up against the backstop.
- Start the rolls turning and bring the top shaft down and form the offset.
- You may be required to do some minor adjustments to the spacing for optimum parts.

1/2” #20 Flange Rolls

- Install flat roll on the top shaft.
- Remove bottom spacing collar and install the supplied threaded spacing collar in its place.
- Loosen the bottom shaft locking handle (located on the right-hand side of the machine) then adjust lower shaft all the way in and then tighten the locking handle.
- Install roll with shoulder on the bottom shaft with the shoulder towards the backstop
- Push the top shaft down with your hand **(MAKE SURE THE POWER IS OFF)** until the top and bottom rolls just about touch.
- Thread the outer ring on threaded collar mounted on the bottom shaft until it makes contact with the back of the bottom roll. Slowly continue to turn it until there is about 2 times material thickness spacing between the back of the top roll and the face of the step on the bottom roll.
- Tighten the roll locking nuts and recheck clearance.
- Bring the backstop up to the shoulder on the bottom roll leaving about 1/8” of clearance between the back of the bottom roll and the backplate.
- The capacity on the rolls is 14GA MS and 16 Ga SS.
- To achieve a good flange the operator must keep a hand position of 2 o’clock or 10 o’clock depending on which side of the rolls they are standing on. It is critical to keep a slight upward pressure on the material and the roll direction must be moving the material away from the operators standing position. Bring the top shaft down slowly for the first couple of revolutions and once the flange starts to form it can be finished quicker.

Crimp Rolls

- Remove the large shaft spacing collars on the top and bottom shaft
- Install the small spacers that came with the rolls on the shafts.
- Install the top and bottom crimp roll with the recess in the face of the roll to the front of the machine.
- Bring the top shaft down until the rolls mesh together.
- Tighten the locking collars.
- Adjust the backstop up to the end of the crimp rolls and tighten.
- When you are ready to form the crimp. With the rolls separated place your material over the bottom roll until the material is against the backstop.
- You can now press on the footswitch and begin the crimping process.

Combination Bead & Crimp

- Remove the large shaft spacing collars on the top and bottom shaft
- Install the top and bottom crimp rolls with the recess in the face of the roll to the back of the shaft.
- Install the male bead roll on the bottom shaft with the highest portion of the roll facing out.
- Install the female bead roll on the top shaft with the highest portion of the roll facing out.
- Bring the top shaft down until the rolls mesh together.
- Tighten the locking collars.
- Adjust the backstop up to the end of the crimp rolls and tighten.
- When you are ready to form the crimp. With the rolls separated place your material over the bottom roll until the material is against the backstop.
- You can now press on the footswitch and begin the crimping process.

Spin-In Collar Roll Installation

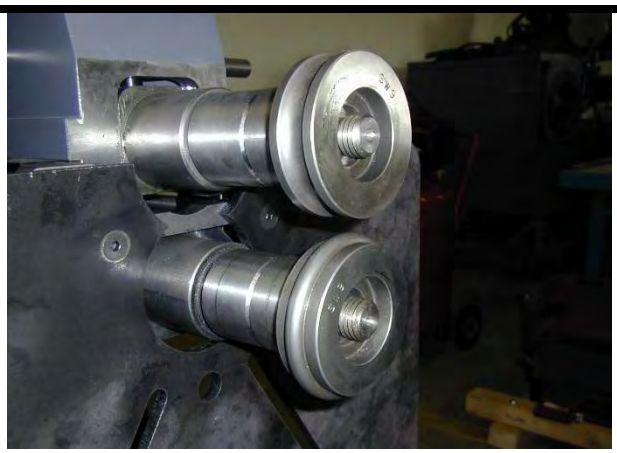

Remove Locking nuts from top and bottom shafts.

Remove Top and Bottom Rolls from the machine

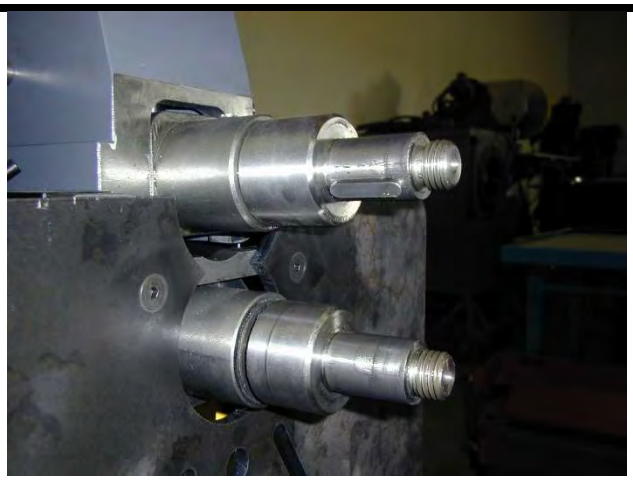

Remove the factory spacing collars from the top and bottom shafts.

Install the pusher mechanism by sliding the collars over the shafts as far back on the shafts as possible.

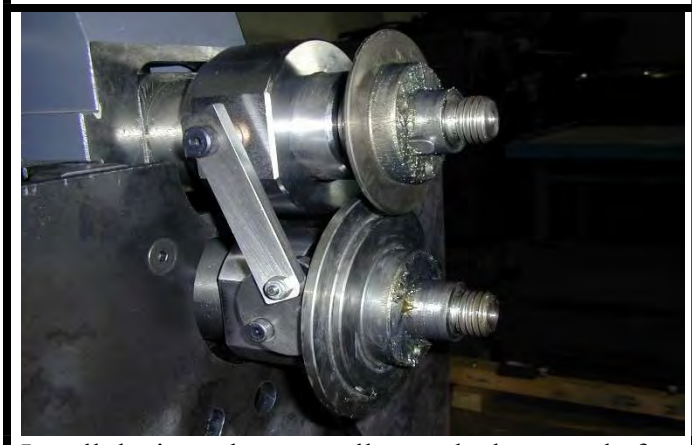

Install the inner bottom roll onto the bottom shaft and then install the inner top roll onto the top shaft.

Place the springs in the pockets of the outer bottom roll and align the springs with the pockets on the inner bottom roll. Once springs are in their pockets you can thread on the locking nut to hold the rolls in place. By filling the spring pockets with grease, it makes it easier as the grease keep the springs from falling out.

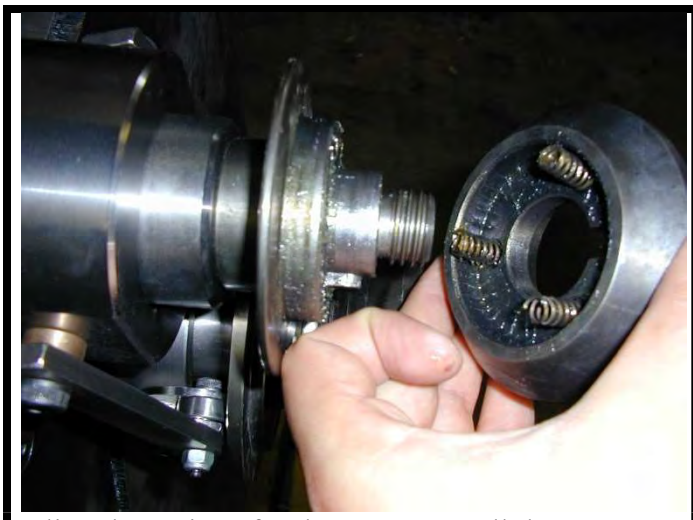

Align the springs for the outer top roll the same as the outer bottom roll and tighten the top locking nut to hold the rolls in place.

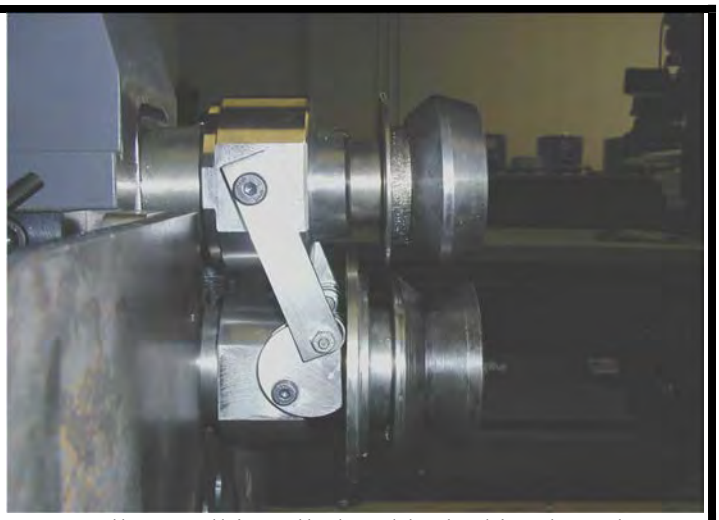

Once rolls are all installed and locked in place the total assembly should look as shown above.

Clamp Hat Channel to the back plate with vise grips or C clamps to so the bearing will support the part being formed.

EMT-7R Air Cylinder Operation

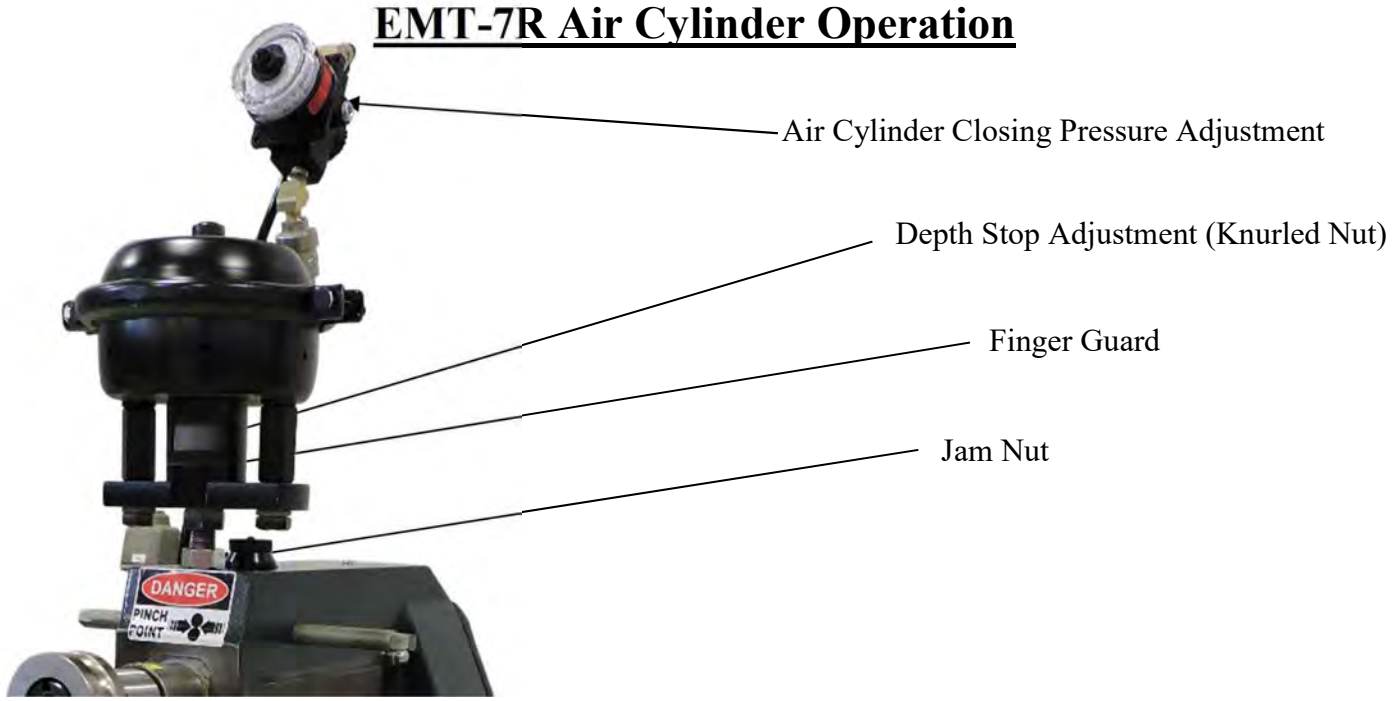

The EMT-7R Air Cylinder option is a cost-effective way of allowing the operator hands free operation to maintain full control of the part being formed.

The air cylinder is initialized when the foot pedal is depressed and returns to its home position when the foot pedal is released.

The air cylinder option comes standard with a closing pressure adjustment which is necessary during operations that require multiple revolutions of the part to be formed (i.e.: ½" Flange Rolls). Also included is a closing speed valve located underneath the motor at the back of the machine. The depth stop adjustment allows the operator to stop the top shaft at a predetermined depth for production operations. To adjust the air cylinder to the desired depth, use your thumb and adjust the Knurled Nut which is located inside the window of the finger guard. Screwing the Knurled Nut down will shorten the stroke of the cylinder and lessen the depth of the profile being formed. Raising the Knurled Nut will allow the rolls to come closer together thereby allowing the profile to be deeper.

If for any reason the air cylinder must be removed to allow the operator to utilize the standard hand crank that was shipped with your EMT-7R the following process must be followed. First disconnect the air supply from your compressor to the unit. Then remove the plastic air line from the top of the air cylinder that is connected to the end of the speed control valve by pushing and holding the plastic ring in while pulling on the air line. Next loosen the jam nut (shown in the picture above) and then spin the air cylinder out of the threaded hole and thread in the hand crank.

Air/Oil Hydraulic with Fwd/Rev Foot Pedal & Pendant Control

The Air/Oil top shaft is actuated is by means of a two-stage foot pedal or a hand held pendant allowing hands free operation of the EMT-7R. The Fwd/Rev Foot Pedal has two separate foot pedals mounted side by side with 2-stage foot pedal mounted on the left-hand side. If the mode switch is in "foot pedal mode", the 2-stage pedal located on the left-hand side is active while in foot pedal mode the right-hand pedal is inactive. There are two separate micro switches inside the left-hand foot pedal, and they operate as follows. When you press on the pedal halfway down the rolls begin to turn but the hydraulics do not engage. Then by pressing the pedal all the way to the floor you then activate the air/hydraulic system causing the top shaft to start traveling down. To jog the top shaft down and then hold it at a desired position just bring the pedal back to the halfway point and keep your foot there and the top shaft will stop its downward movement and hold in that position. To continue stepping down the top shaft you can lightly tap your foot to the floor and bring it back to the center position until the desired depth for your profile is achieved. Once your part is finished raise your foot completely off the foot pedal and the top shaft will return to its home position and the rolls will stop rotating. For repetitive parts where a certain depth is required for each part the stop nut on the top of the hydraulic cylinder can be turned up or down and can be used as an indicator to the operator that the desired depth has been reached.

In "pendant mode" the 2nd switch of the foot pedal is no longer active, but the right-hand pedal is now active, and the separate pedals control the forward and reverse motion of the rolls. Using the up and down buttons on the handheld pendant operates the hydraulic top shaft.

****A pressure relief valve is part of the hydraulic package, so it is safe to bring the rolls together under load where a larger amount of pressure is required to form your profile. Once the pressure builds to a set value the pressure relief valve will open and oil will bypass the cylinder and safely return to the tank.**

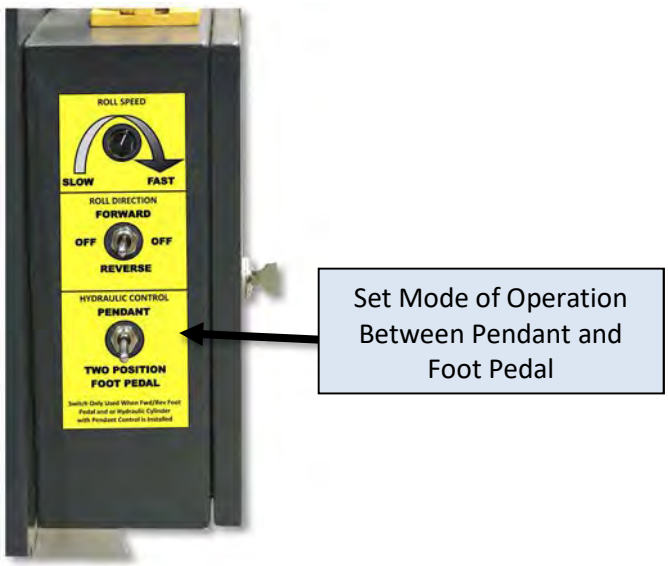

EMPRO EMT-7R Automated HMI Control System

The EMT-7R Automated Control System allows repetitive routines to be setup and run easily.

START UP

When the main power switch is turned on this screen will be displayed, and the operator must press the start button.

WARNING SCREEN

After pressing the **START** button this warning screen will be displayed in English so please take the time and read it for your safety. The **I AGREE** buttons in both English and Spanish will appear and either can be pressed to move to the run screen.

RUN SCREEN

This screen is where all the programs will be run. From the run screen you can get to many other screens that will be required to create and save a program.

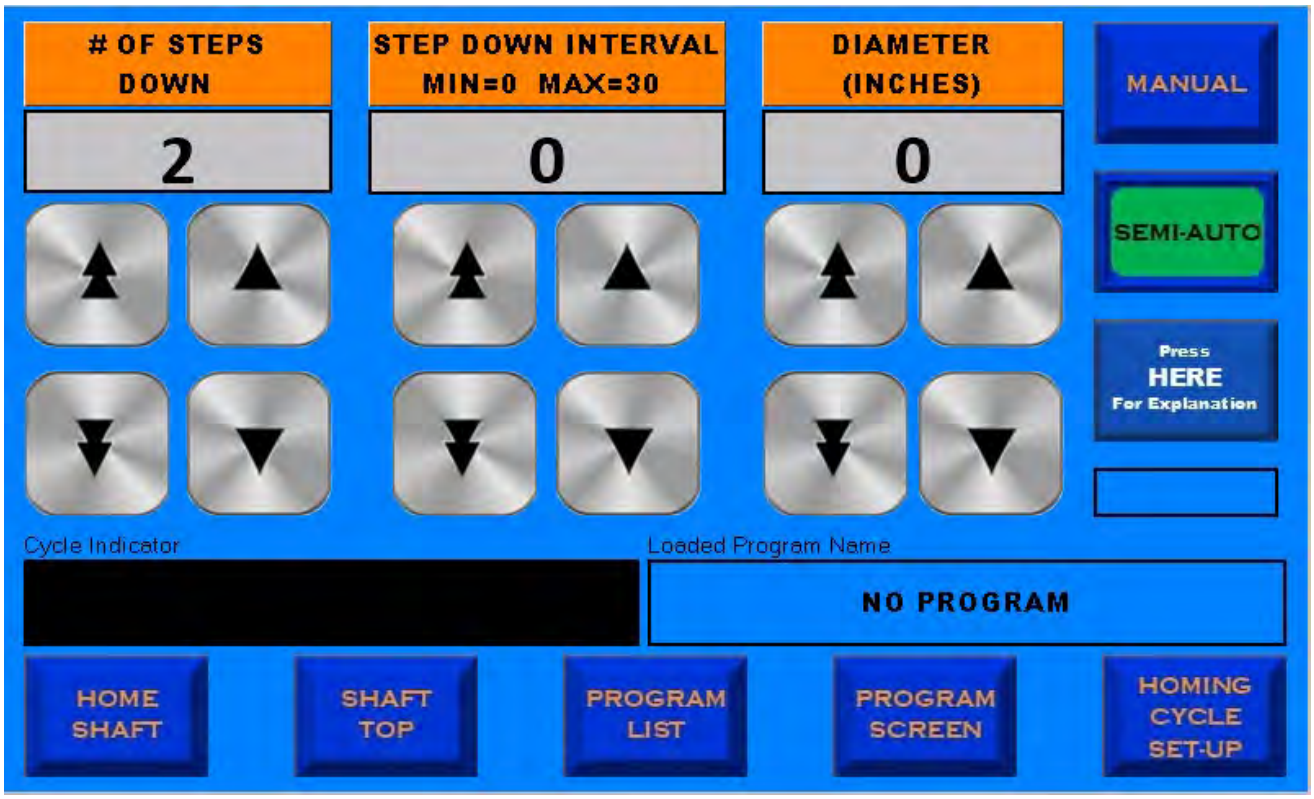

When pressed the Homing Cycle is initialized.

When pressed the top shaft goes to its uppermost position.

When pressed the list of all saved programs will appear on the screen.

When pressed all five parameters that make up a program appears.

When pressed the screen containing the two parameters that control the homing cycle appears.

Text appears in this box when cycle begins and displays “CYCLE ACTIVE” when part is being run. Once the final revolution of the part begins the operator will be notified here with “LAST CYCLE” flashing in red. Also, when the E-STOP is pressed the display will show “E-STOP” and will clear once E-STOP is released.

Once a program is loaded into memory this box will display the name of the program.

MANUAL OPERATION

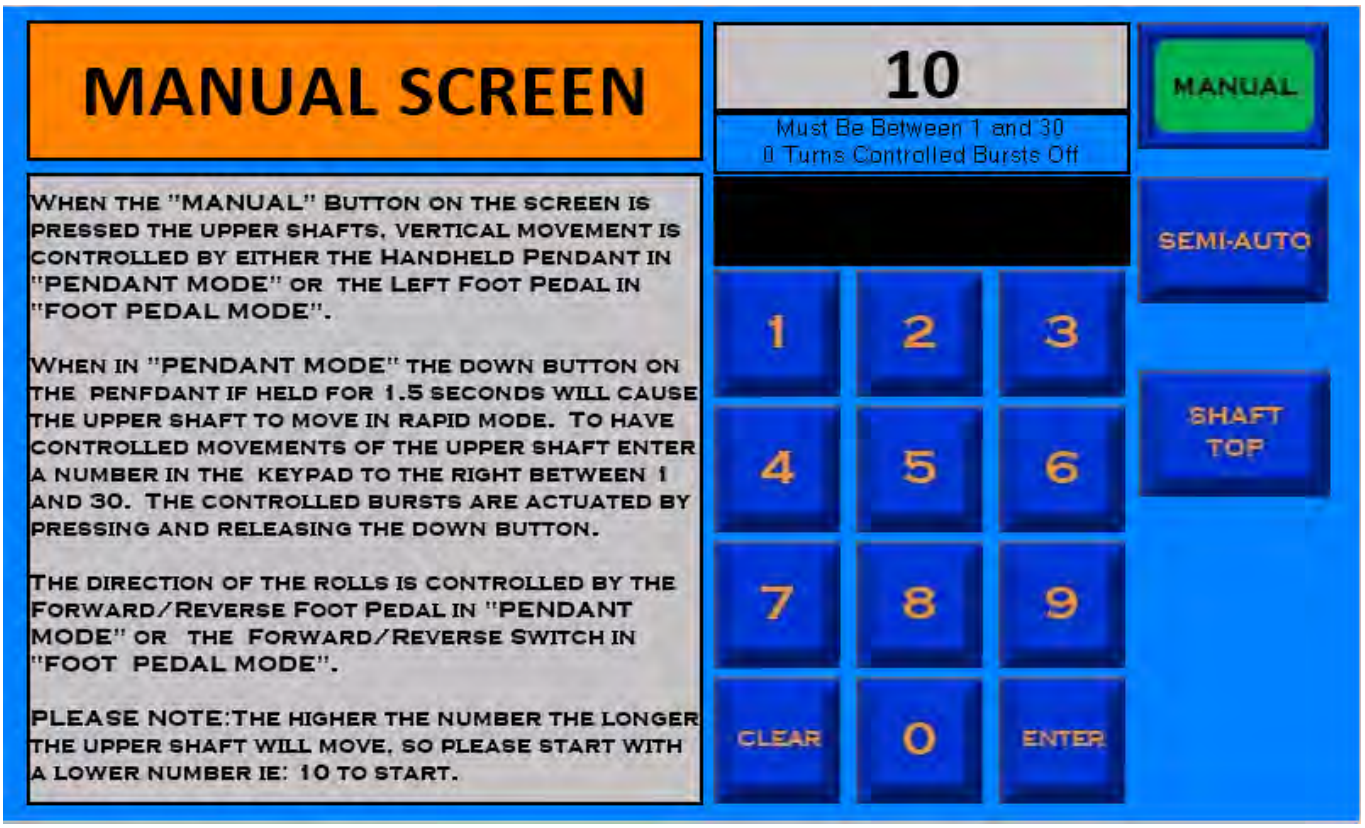

When the

Button on the screen is pressed the upper shafts, vertical movement is controlled by either the Handheld Pendant in "PENDANT MODE" or the Left Foot Pedal in "FOOT PEDAL MODE".

The direction of the rolls is controlled by the Forward/Reverse Foot Pedal in "PENDANT MODE" or the Forward/Reverse Switch in "FOOT PEDAL MODE".

From this screen the only functions available to the operator to run the EMT-7R are the Foot Pedal, Pendant Control, the switch cluster found on the right side of the control panel and the E-Stop found above the switch cluster.

Forward/Reverse Foot Pedal

Pendant Control

Switch Cluster

E-Stop

Manual Operation: There are two ways you can control the top shaft movement in manual mode. The first is "**Two Position Foot Pedal"** mode and the second is by using the hand-held pendant in **"Pendant"** mode.

- In ***"Two Position Foot Pedal"*** mode the only the left foot pedal functions. The pedal has two microswitches in it and by pressing only half way on the pedal the first microswitch starts the rolls turning and then by pressing further down on the pedal the second microswitch comes in to play which starts the hydraulic movement of the top shaft. Returning the pedal to the center position stops the top shaft from moving but allows the rolls to continue to turn and remain in the same position. Releasing the foot pedal stops the rolls turning and returns the top shaft to its uppermost position. The Forward/Reverse Switch on the front of the electrical panel determines the roll direction. The "Roll Speed" knob controls the speed of the rolls turning in either direction.

- In ***"Pendant"*** mode the side by side (Forward/Reverse) foot pedals are now both active and start the rotation of the rolls. Each pedal controls a different rotational direction that the rolls are turning. The second microswitch in the left foot pedal is not active so the operator does not have to be concerned about the position of the pedal in this mode. The top shaft is controlled by the Up and Down buttons on the yellow hand-held pendant. To operate with controlled bursts, enter a value using the onboard keypad with a value between 1 and 30. The higher the value the longer the burst. To override the controlled bursts, enter a value of 0 or hold the down button for 1.5 seconds. Please be aware that the opening of the rolls in this mode is controlled by the Top White Arrow on the pendant or by pressing the

button on the touch screen or the E-Stop Button on the control panel.

E-STOP BUTTON

In any operation whether Manual or Semi-Automatic the E-Stop button will stop the rolls from turning and immediately bring the top shaft to the uppermost position. When the E-Stop is released the upper shaft will not go to the home position until the operator presses the

button.

SEMI-AUTO OPERATION

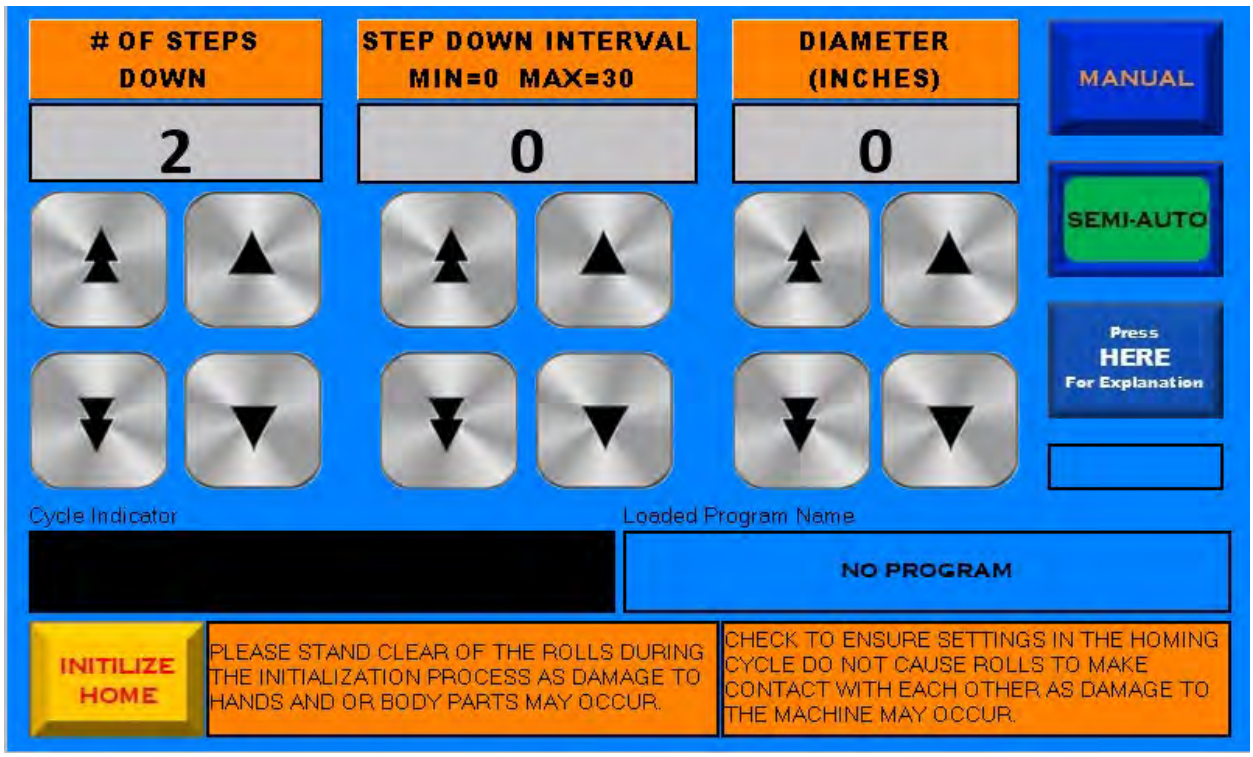

If you are coming out of manual operation and when you press the

button, you will have to initialize the homing cycle by pressing the

button. If you have a program loaded the homing cycle will start and the shaft will go to the uppermost position and wait the set time before moving to the set home value. If no program is loaded, then the button and warning will be cleared, and nothing will happen. Please heed both warnings to ensure that anyone in the vicinity is clear of the EMT-7R prior to pressing the button.

PLEASE STAND CLEAR OF THE ROLLS DURING THE INITIALIZATION PROCESS AS DAMAGE TO HANDS AND OR BODY PARTS MAY OCCUR.

CHECK TO ENSURE SETTINGS IN THE HOMING CYCLE DO NOT CAUSE ROLLS TO MAKE CONTACT WITH EACH OTHER AS DAMAGE TO THE MACHINE MAY OCCUR.

LOAD PROGRAM: To load a program from memory press the

button and the following screen will appear:

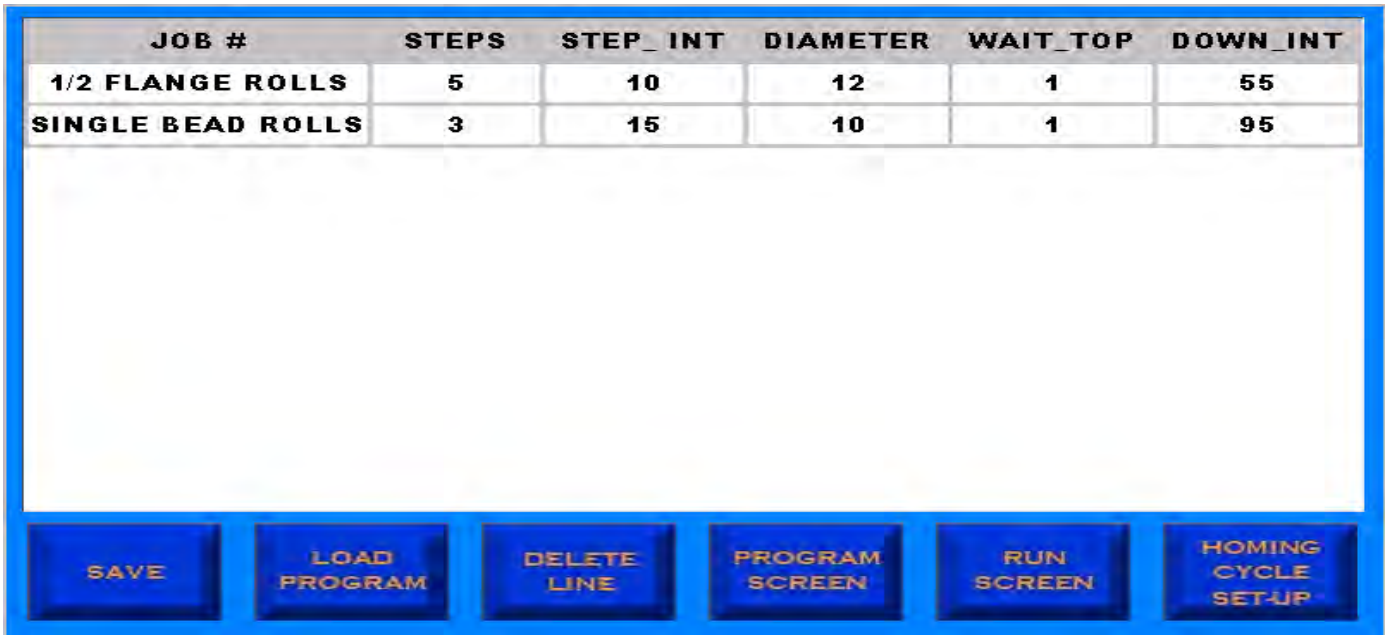

Using your finger or the sytlus provided highlight the line that contains the program you would like to load and press the

button. You will automatically be taken to the run screen and all the parameters from the program will be loaded in memory and the name of the program in memory will appear in the Loaded Program Name Field.

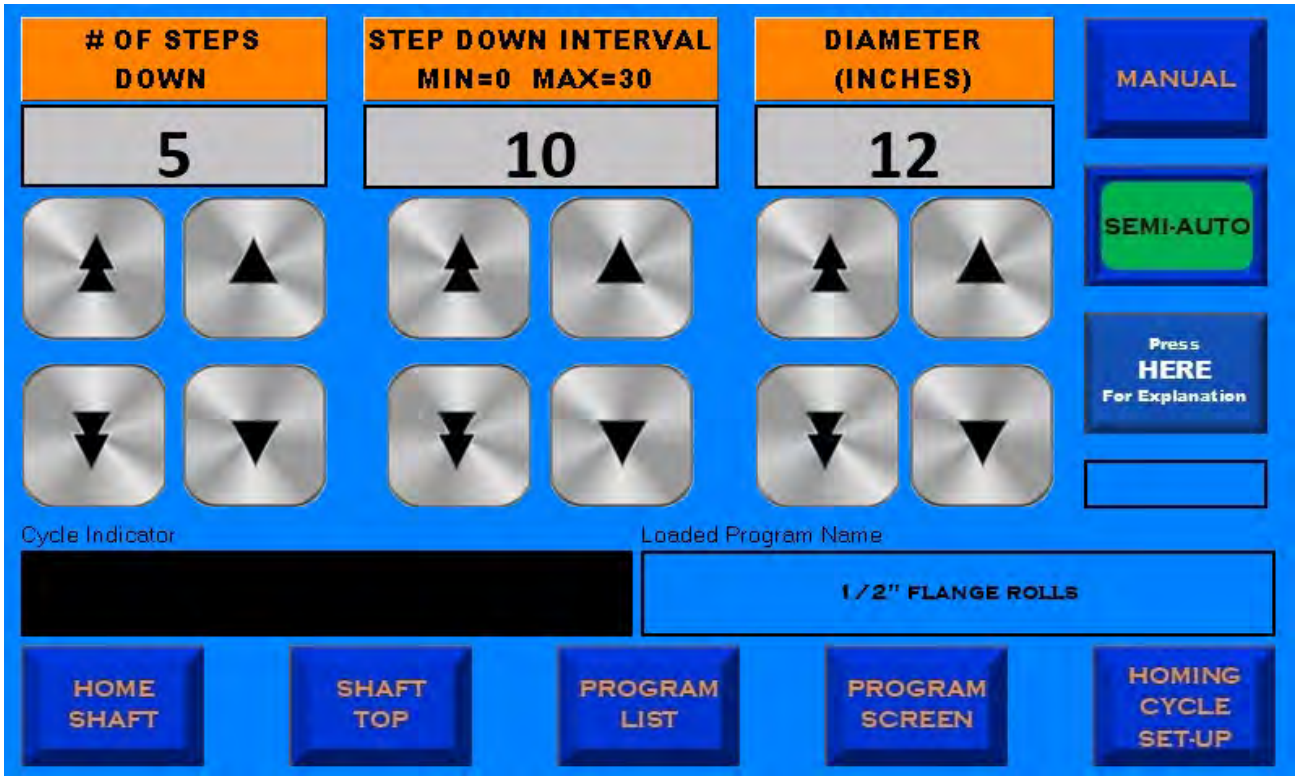

After you press the

button, you will have to initialize the homing cycle by pressing the

button. Once pressed, the homing cycle will start, and the shaft will go to the uppermost position and wait the set time before moving to the set home value. Please heed both warnings to ensure that anyone in the vicinity is clear of the EMT-7R prior to pressing the button.

PLEASE STAND CLEAR OF THE ROLLS DURING THE INITIALIZATION PROCESS AS DAMAGE TO HANDS AND OR BODY PARTS MAY OCCUR.

CHECK TO ENSURE SETTINGS IN THE HOMING CYCLE DO NOT CAUSE ROLLS TO MAKE CONTACT WITH EACH OTHER AS DAMAGE TO THE MACHINE MAY OCCUR.

You can now run the program by pressing either the forward or reverse foot pedal.

HINT: For best results you will want to run the part you are holding so the direction of the part travels away from you. Also, make sure that the home position is set so you can just get your material between the rolls. After the foot pedal is pressed the first downward movement of the upper shaft will close the rolls, so the material is pinched, and the part starts to turn without any slippage.

PROGRAMMING PARTS

To program a new part from scratch or to modify an existing part loaded into the memory you will need to go the program screen by pressing the

button. Once pressed you will come to this screen:

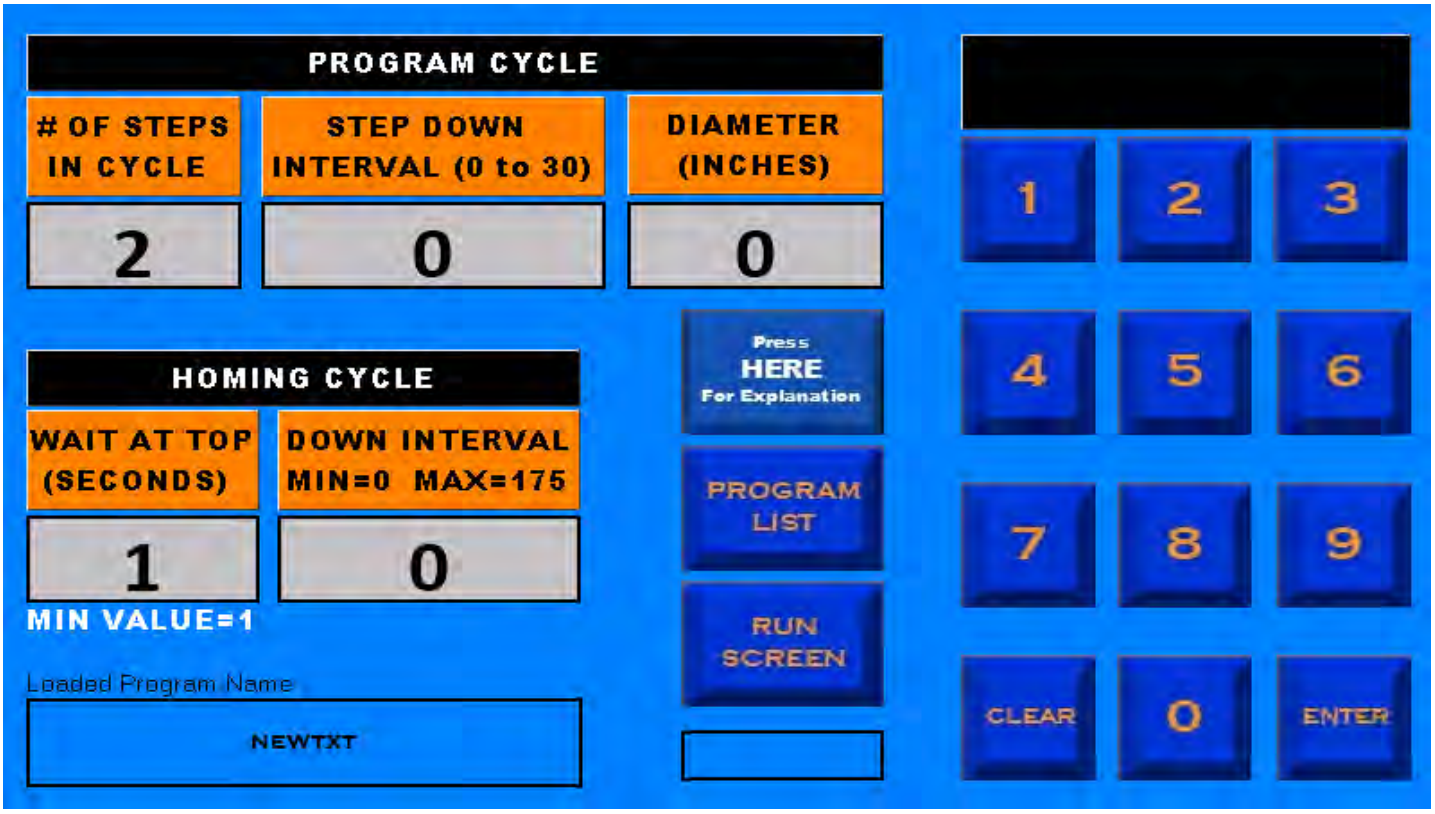

Using the stylus or your finger press highlight the field you want to change and then using the number keypad type the number you desire, and press enter. If you make a mistake you can press clear.

FIELD DEFINITIONS

This field determines the number of steps down or the number of revolutions after the first step the part will take to be completed. The minimum value which can be entered is 2.

HINT: The higher the number of steps down the smaller the **STEP-DOWN INTERVAL** number is required.

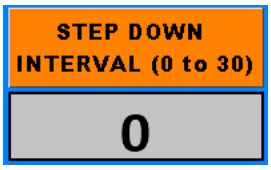

This field is a reference number only and does not correspond to a measured value. The number in this field represents the downward movement the upper shaft takes after each complete revolution of the part being formed. The first step down happens immediately after you step on the foot pedal and then after each full revolution of the part.

HINT: A good starting value is 15 if you are doing simple beading or crimping.

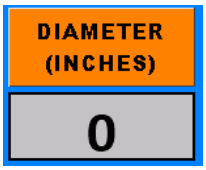

This field is a measured value and represents the outside diameter of the part being formed.

HINT: If you have a 4-1/2" OD part use 5" in this field.

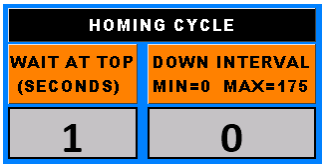

These fields are used to determine the position of the top shaft after the homing cycle is complete.

WAIT AT TOP is measured in seconds and represents the time the shaft stays at its uppermost position before cycling to its home position. Minimum value is 1 second.

HINT: Use a higher value if you need a bit of time to get the part out of the machine or to load the next part.

DOWN INTERVAL is a reference number only and does not correspond to a measured value. The number in this field represents the downward movement the upper shaft takes after the wait at top time is complete. This determines the space between the rolls before the job is run.

HINT: You will want to have the rolls as close together as possible meaning just enough room to allow you to get your part in place but not close enough that you would have to use any force. A good starting point is 85 to 95 when using beading or crimping rolls. Once you step on the pedal to start the job you will know if you must increase or decrease this number. If the part slips and does not grab right away this number will have to be larger. If the part grabs and metal crinkles or the machine labors, then this number needs to decrease.

Once you have filled in all the required fields then press

and you will be taken to this screen:

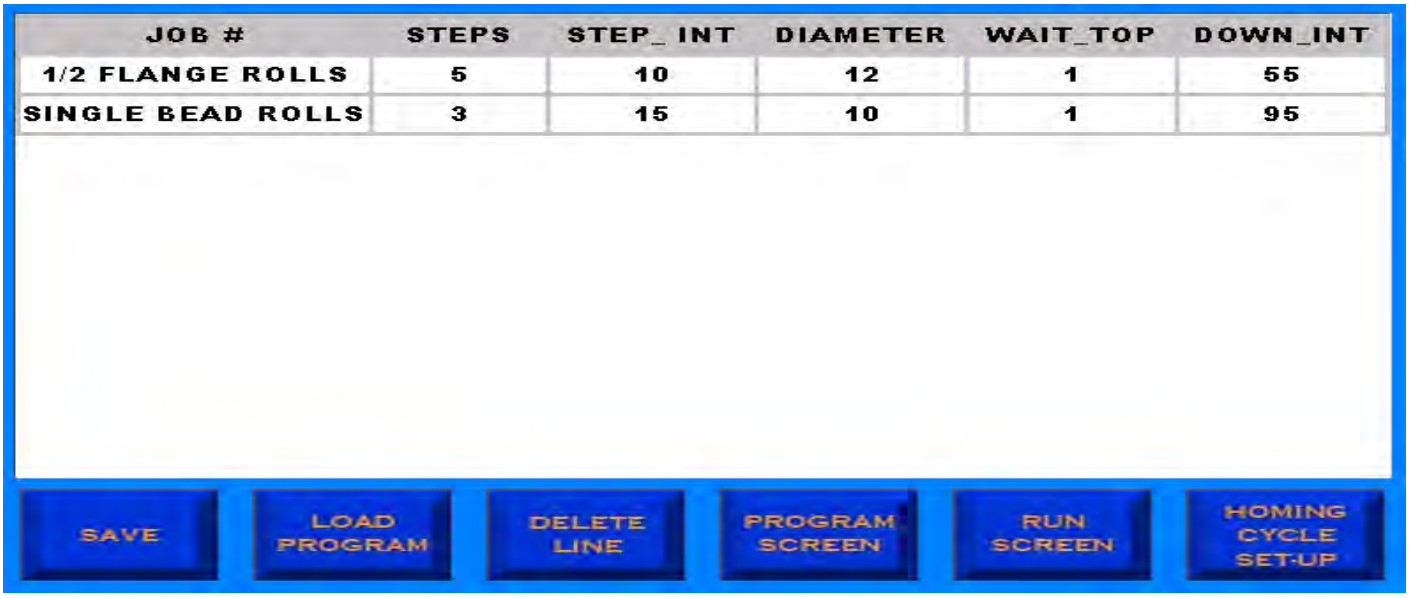

JOB #	STEPS	STEP_ INT	DIAMETER	WAIT_TOP	DOWN_INT
1/2 FLANGE ROLLS	5	10	12	1	55
SINGLE BEAD ROLLS	3	15	10	1	95

You will want to save the new program so press

and a keypad will appear:

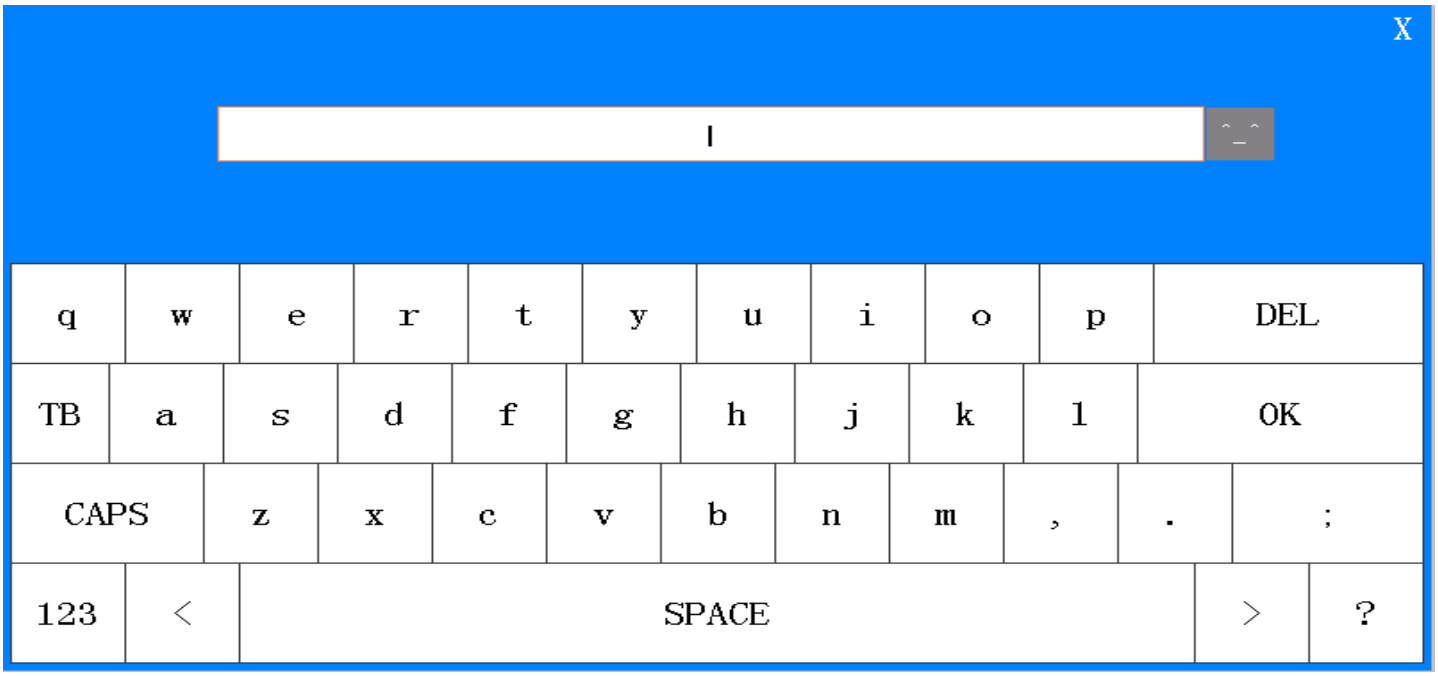

Using the stylus or your finger type the program name and press OK.

The newly saved job will now show up in your program list and can be recalled at any time.

JOB #	STEPS	STEP_ INT	DIAMETER	WAIT_TOP	DOWN_INT
CRIMP JOB	3	15	10	3	95
1/2 FLANGE ROLLS	5	10	12	1	55
SINGLE BEAD ROLLS	3	15	10	1	95

A program cannot be written over, so to save a program with the same name highlight the line you want to modify and press LOAD PROGRAM. You will be taken to the run screen and then press INITILIZE HOME and then press PROGRAM SCREEN.

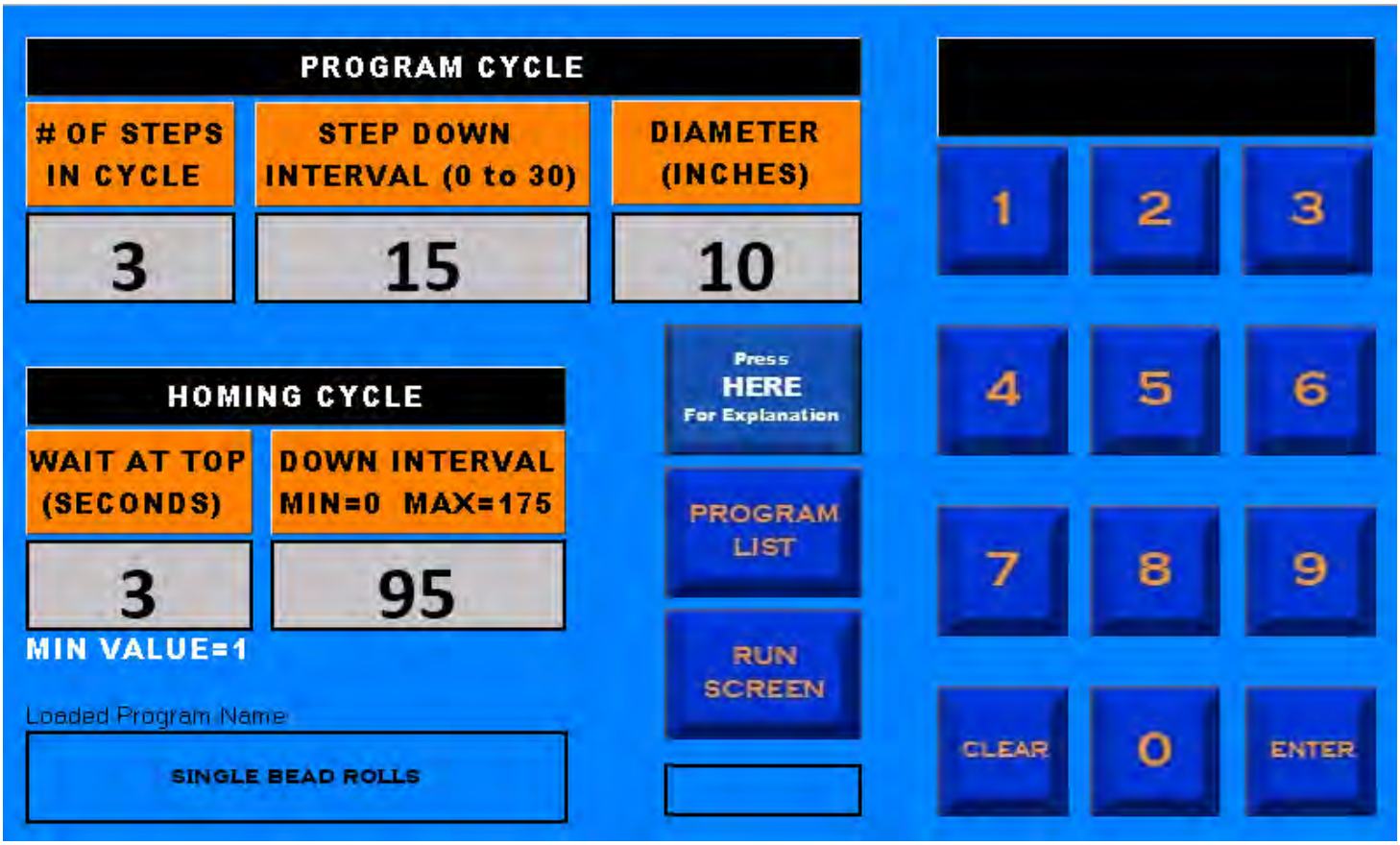

All the parameters from the program you recalled will now be loaded and you can modify them here by highlighting the field that requires changing.

Once the changes are made press the PROGRAM LIST button and you will be taken this screen:

JOB #	STEPS	STEP_ INT	DIAMETER	WAIT_TOP	DOWN_INT
CRIMP JOB	3	15	10	3	95
1/2" FLANGE ROLLS	5	10	12	1	55
SINGLE BEAD ROLLS	3	15	10	3	55

SAVE | LOAD PROGRAM | DELETE LINE | PROGRAM SCREEN | RUN SCREEN | HOMING CYCLE SET-UP

Press the SAVE button and type in the name of the program you want to save it as and press OK.

JOB #	STEPS	STEP_ INT	DIAMETER	WAIT_TOP	DOWN_INT
SINGLE BEAD ROLLS	3	15	8	2	95
CRIMP JOB	3	15	10	3	95
1/2" FLANGE ROLLS	5	10	12	1	55
SINGLE BEAD ROLLS	3	15	10	3	95

You can use the same name as a previous saved program so be careful as this may be confusing for other operators. The new program you have just made will always show up at the top of the page. If you want to get rid of the old program with the same name just highlight the line and press the DELETE LINE button and it will be deleted as shown below.

JOB #	STEPS	STEP_ INT	DIAMETER	WAIT_TOP	DOWN_INT
SINGLE BEAD ROLLS	3	15	8	2	95
CRIMP JOB	3	15	10	3	95
1/2" FLANGE ROLLS	5	10	12	1	55

HOMING CYCLE

The homing cycle is very important when high volume production is required. To get to the HOMING CYCLE SET-UP screen press

on the run screen.

The HOMING CYCLE SET-UP screen will appear with two options to change.

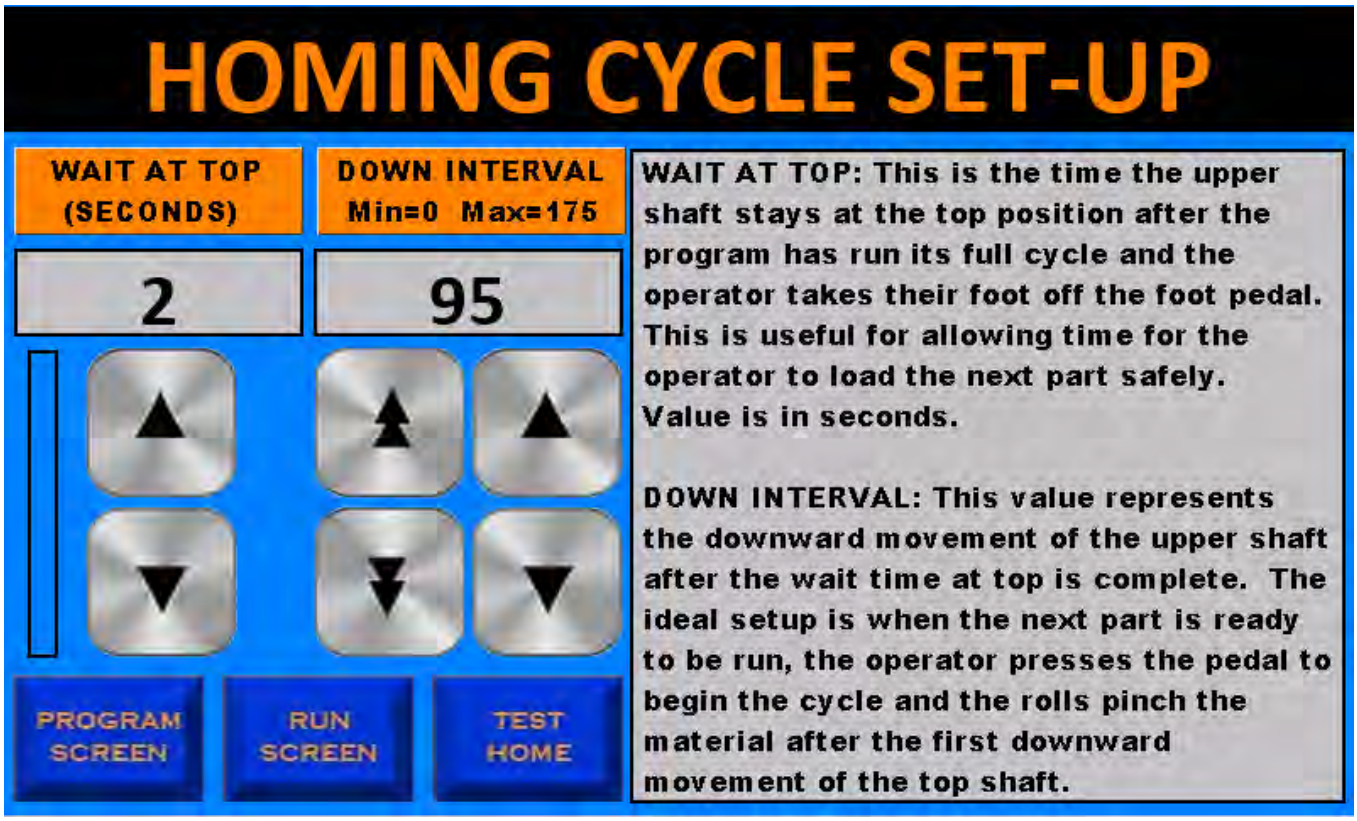

These fields are used to determine the position of the top shaft after the homing cycle is complete.

WAIT AT TOP is measured in seconds and represents the time the shaft stays at its uppermost position before cycling to its home position. Minimum value is 1 second.

HINT: Use a higher value if you need a bit of time to get the part out of the machine or to load the next part.

DOWN INTERVAL is a reference number only and does not correspond to a measured value. The number in this field represents the downward movement the upper shaft takes after the wait at top time is complete. This determines the space between the rolls before the job is run.

HINT: You will want to have the rolls as close together as possible meaning just enough room to allow you to get your part in place but not close enough that you would have to use any force. A good starting point is 85 to 95 when using beading or crimping rolls. Once you step on the pedal to start the job you will know if you must increase or decrease this number. If the part slips and does not grab right away this number will have to be larger. If the part grabs and metal crinkles or the machine labors, then this number needs to decrease.

The

button allows you to test the homing position to get just the right amount of clearance between the rolls to ensure quick engagement of the rolls and the material when you start the cycle.

To return to the run screen press

.

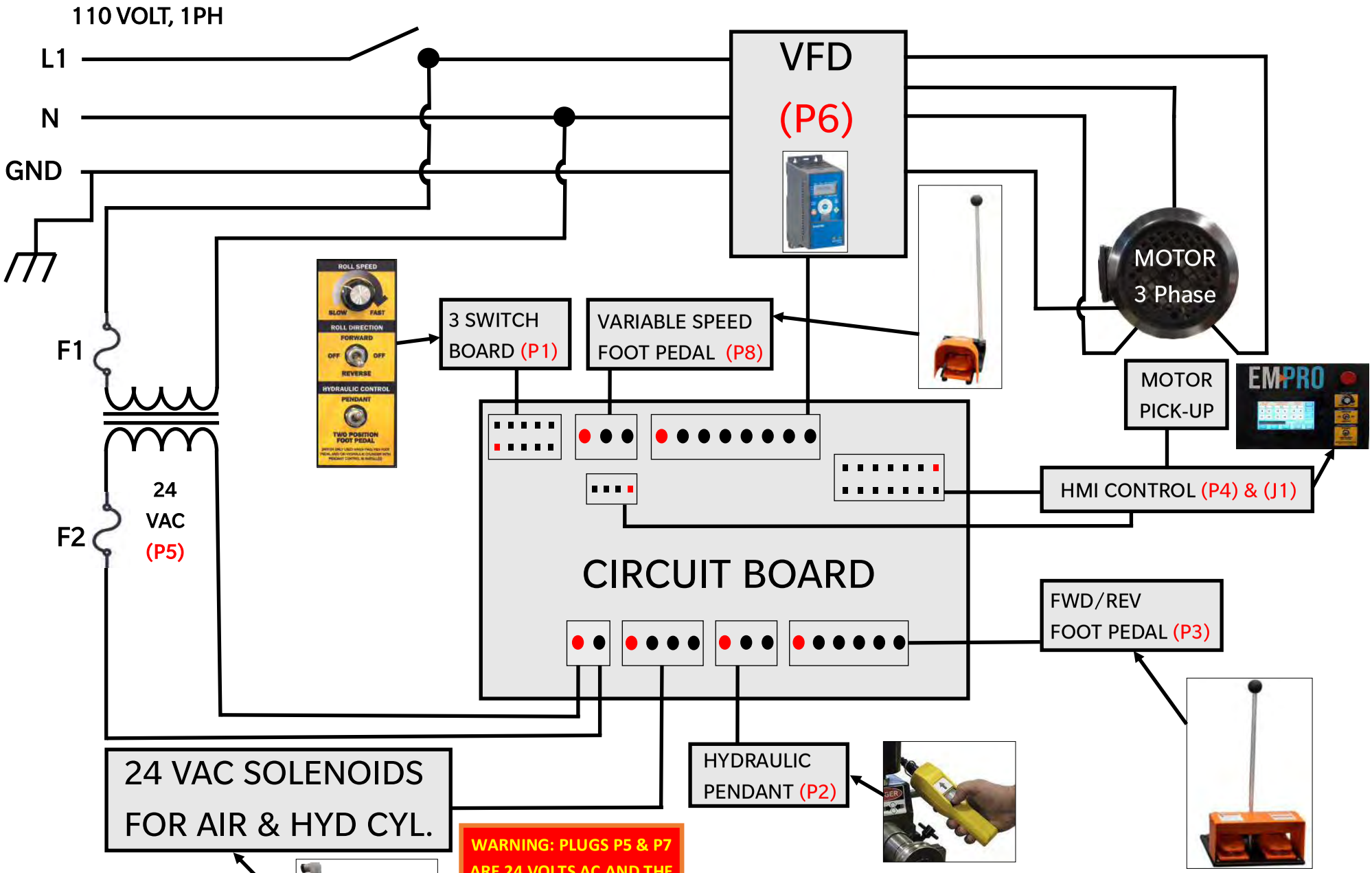

EMPRO
390 Eagle Drive,
Winnipeg, MB., Canada, R3C 2E6
PH# 800-665-8089, Fax 204-779-7796
sales@empire-machinery.com

Created Date:	Approved By:
June 29, 2022	Geoff Child
Voltage:	Revision:
110/1/60	REV #1
Title:	
EMT-7R Circuit Diagram and Connections	

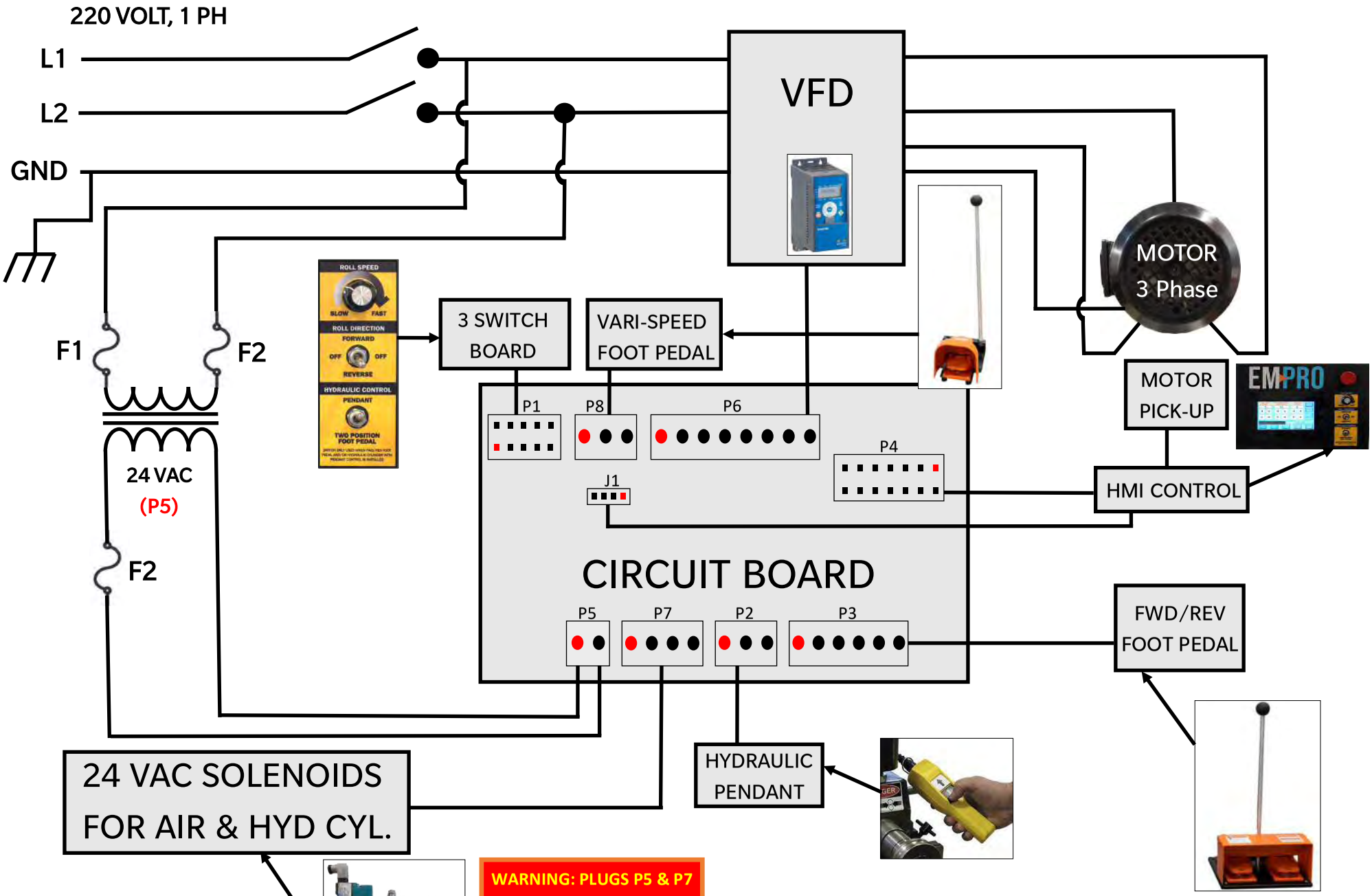

DENOTES PIN #1

WARNING: PLUGS P5 & P7 ARE 24 VOLTS AC AND THE REMAINING CONTROL VOLTAGE PLUGS ARE DC.

EMPRO
390 Eagle Drive,
Winnipeg, MB., Canada, R3C 2E6
PH# 800-665-8089, Fax 204-779-7796
sales@empire-machinery.com

Created Date:	Approved By:
June 29, 2022	Geoff Child
Voltage:	Revision:
220/1/60	REV #1
Title:	
EMT-7R Circuit Diagram and Connections	

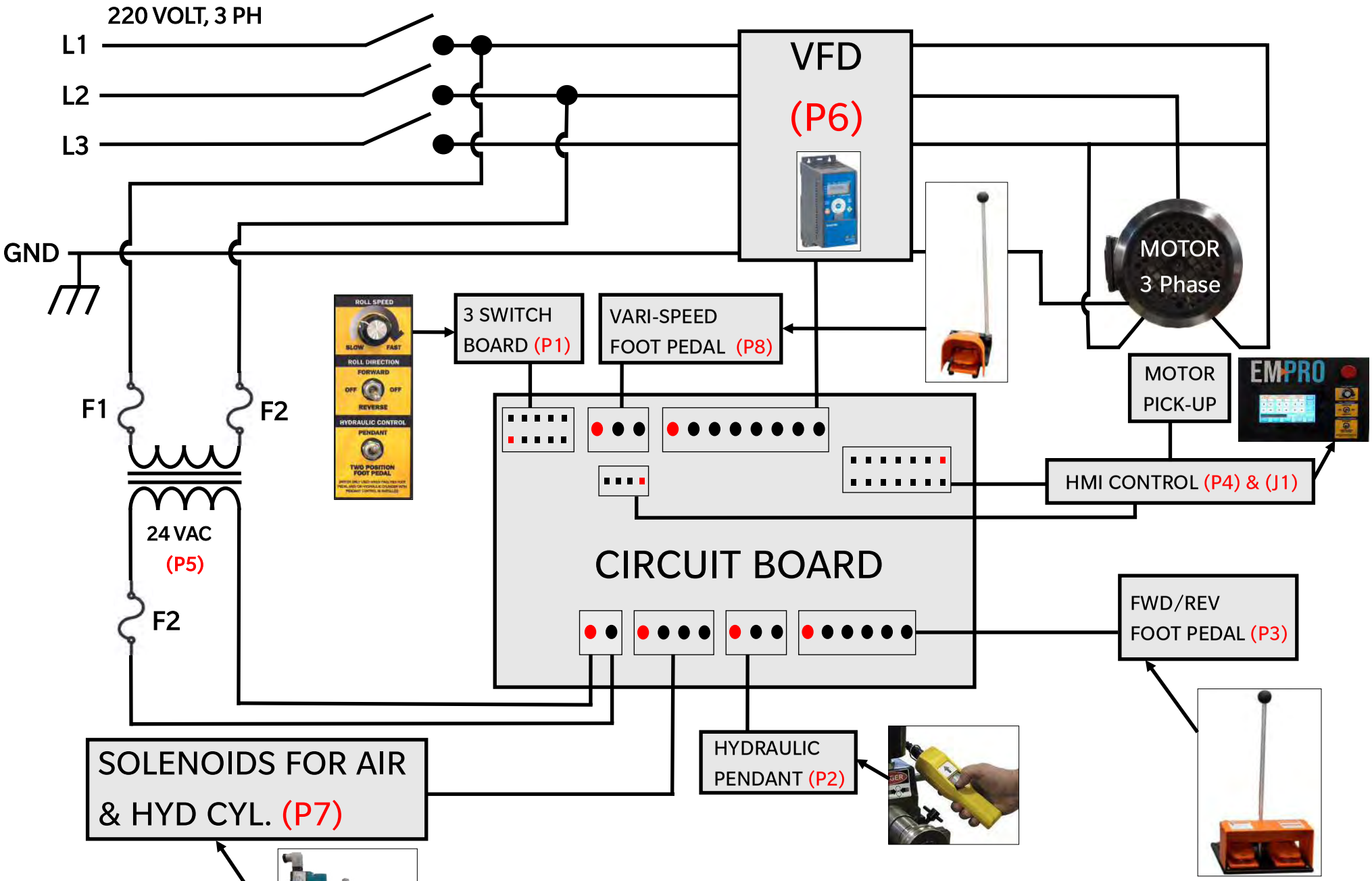

EMPRO
390 Eagle Drive,
Winnipeg, MB., Canada, R3C 2E6
PH# 800-665-8089, Fax 204-779-7796
sales@empire-machinery.com

Created Date:	Approved By:
June 29, 2022	Geoff Child
Voltage:	Revision:
220/3/60	REV #1
Title:	
EMT-7R Circuit Diagram and Connections	

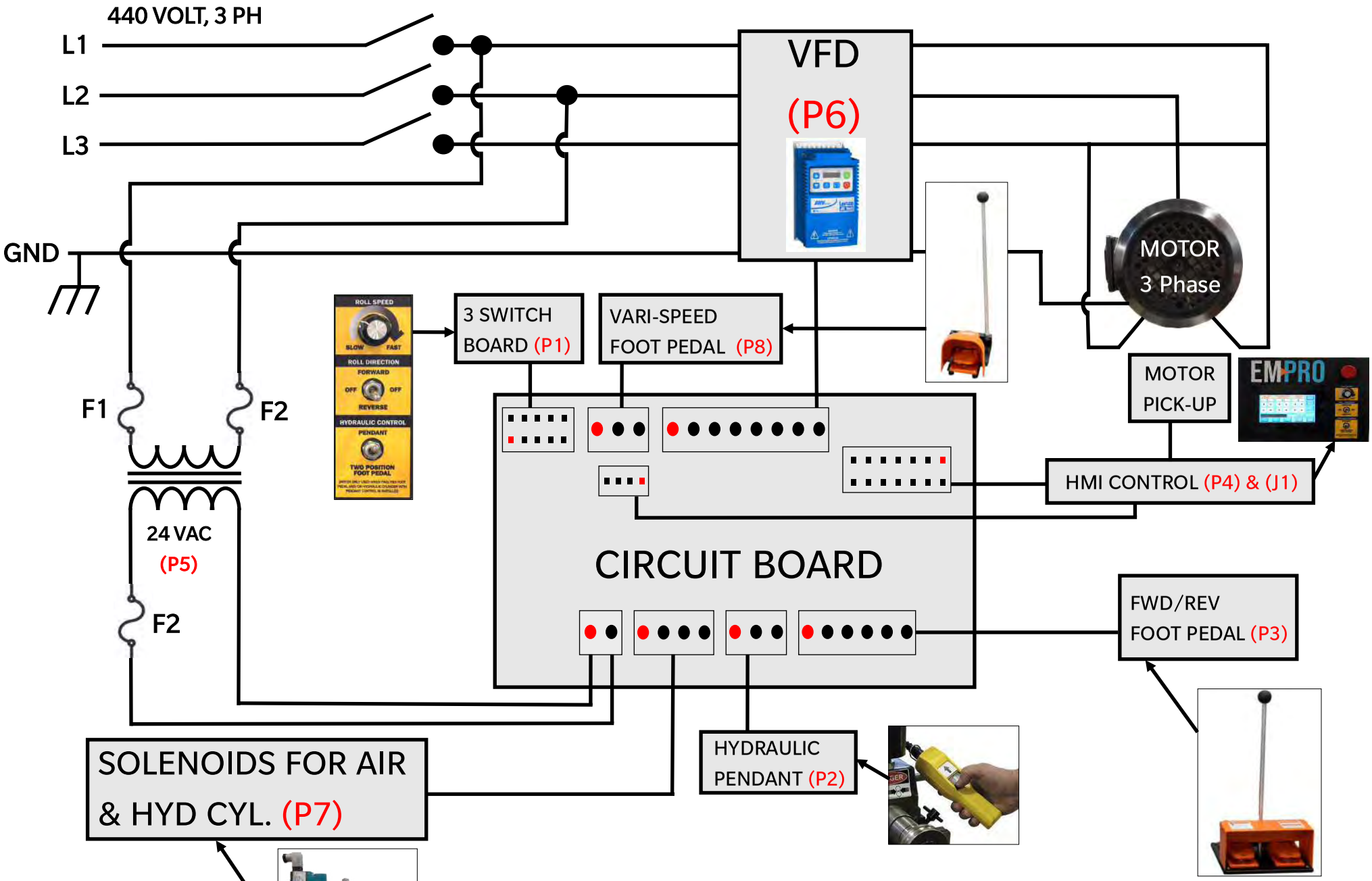

EMPRO 390 Eagle Drive, Winnipeg, MB., Canada, R3C 2E6 PH# 800-665-8089, Fax 204-779-7796 sales@empire-machinery.com	Created Date: June 29, 2022	Approved By: Geoff Child
	Voltage: 440/3/60	Revision: REV #1
	Title: EMT-7R Circuit Diagram and Connections	

HMI
J1 PLUG

RED	+5	1
BLUE	TX	3
YELLOW	RX	4
BLACK	COM	2

3 SWITCH BOARD
P1 PLUG

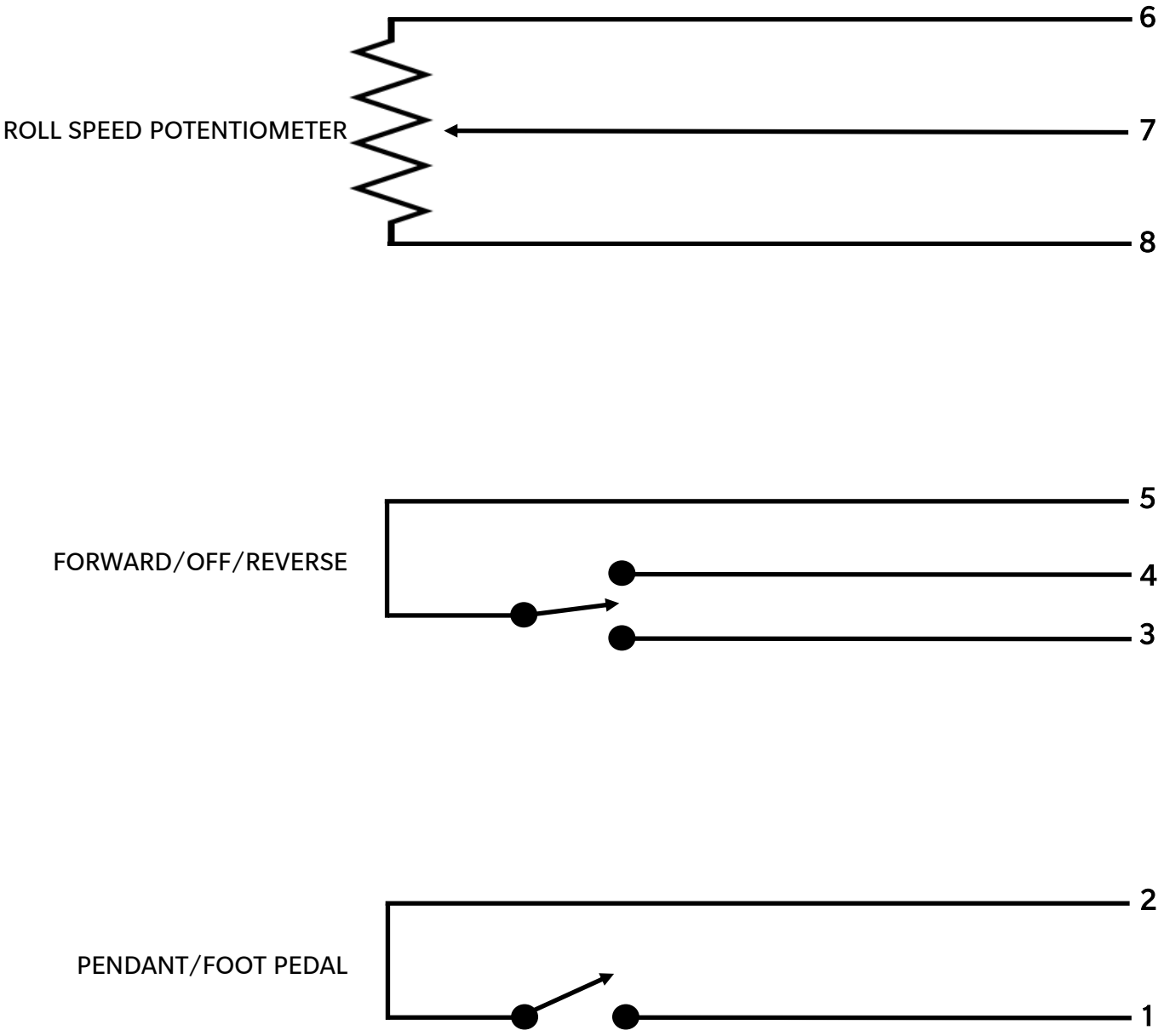

PENDANT CONTROL

P2 PLUG

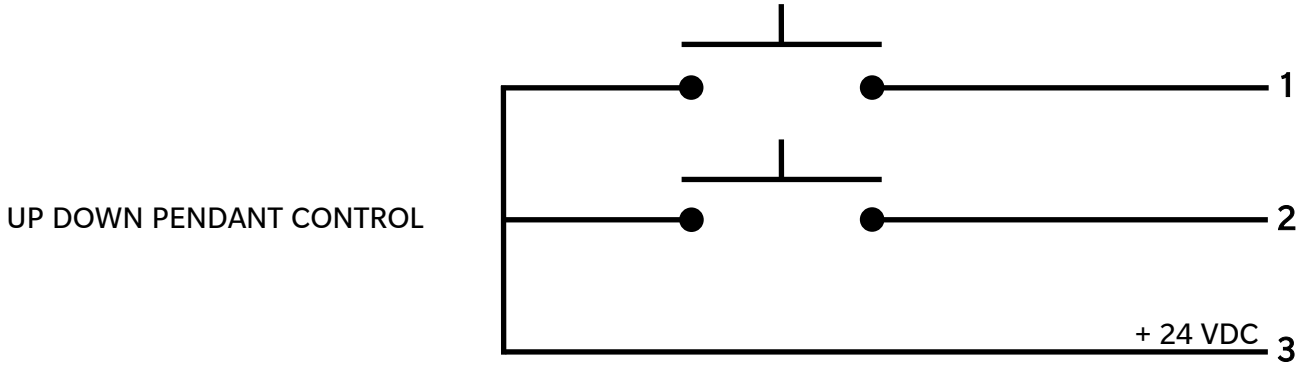

FORWARD-REVERSE FOOT PEDAL

P3 PLUG

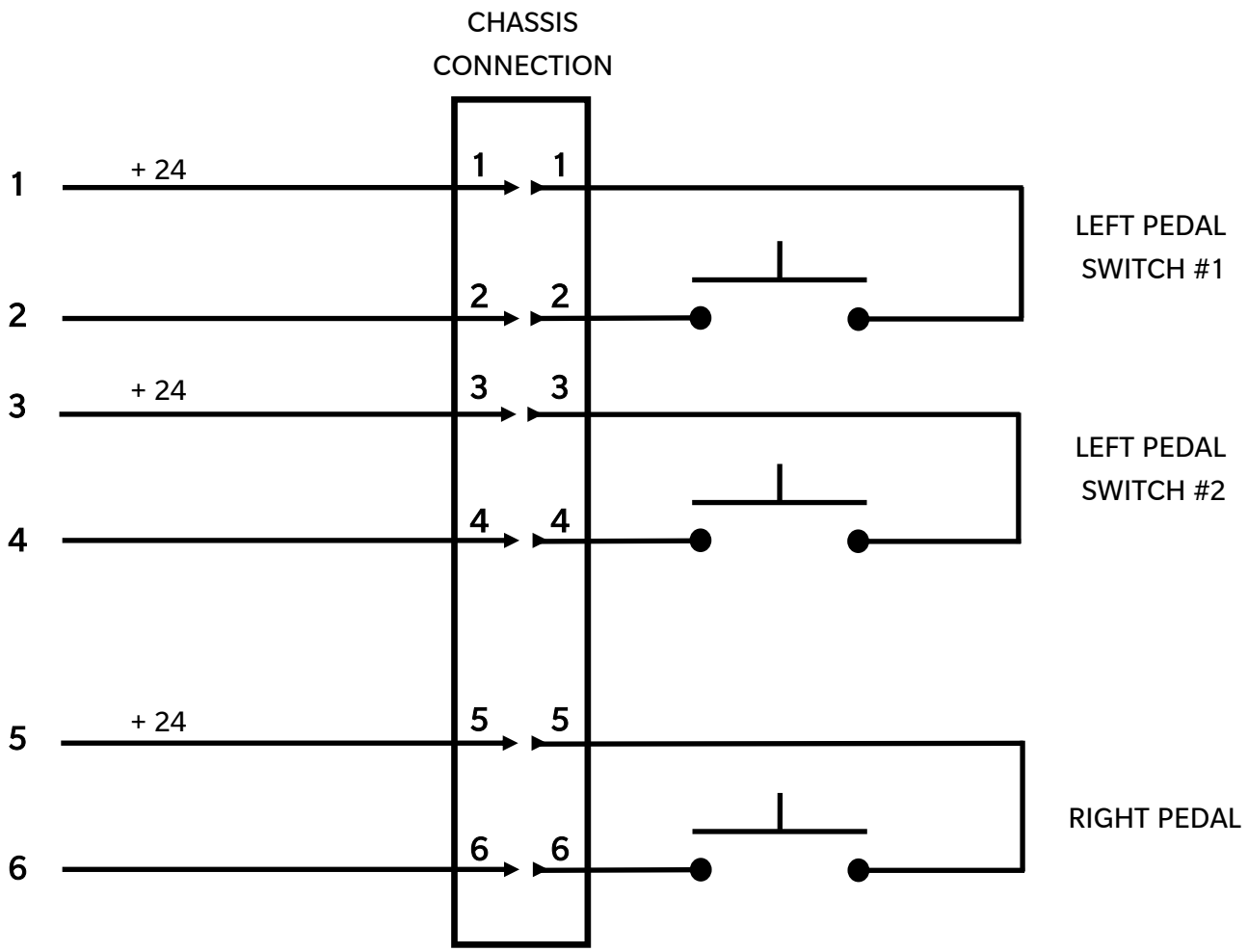

14 PIN CONNECTOR

P4 PLUG

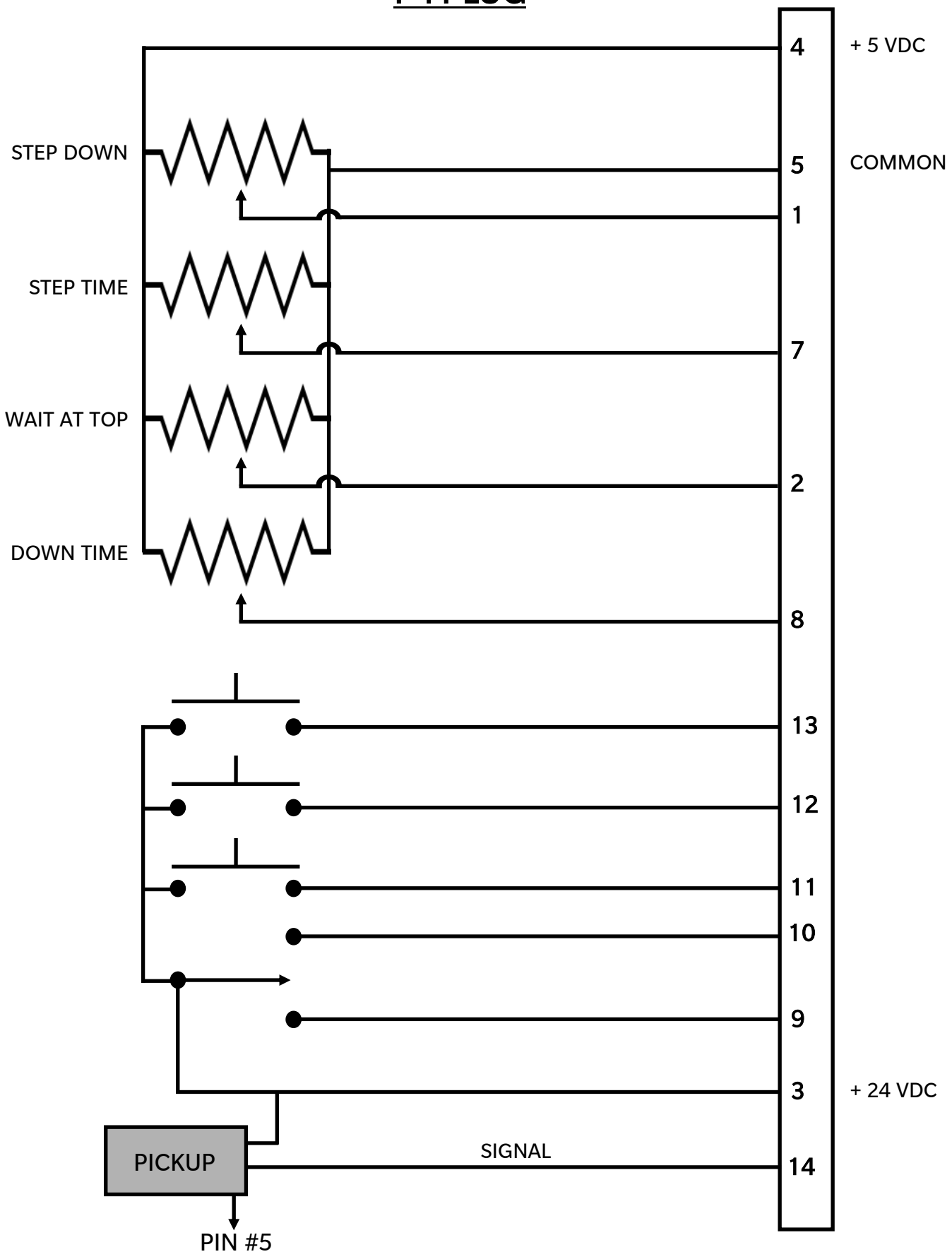

24VAC & SOLENOID CONNECTIONS

P5 & P7 PLUG

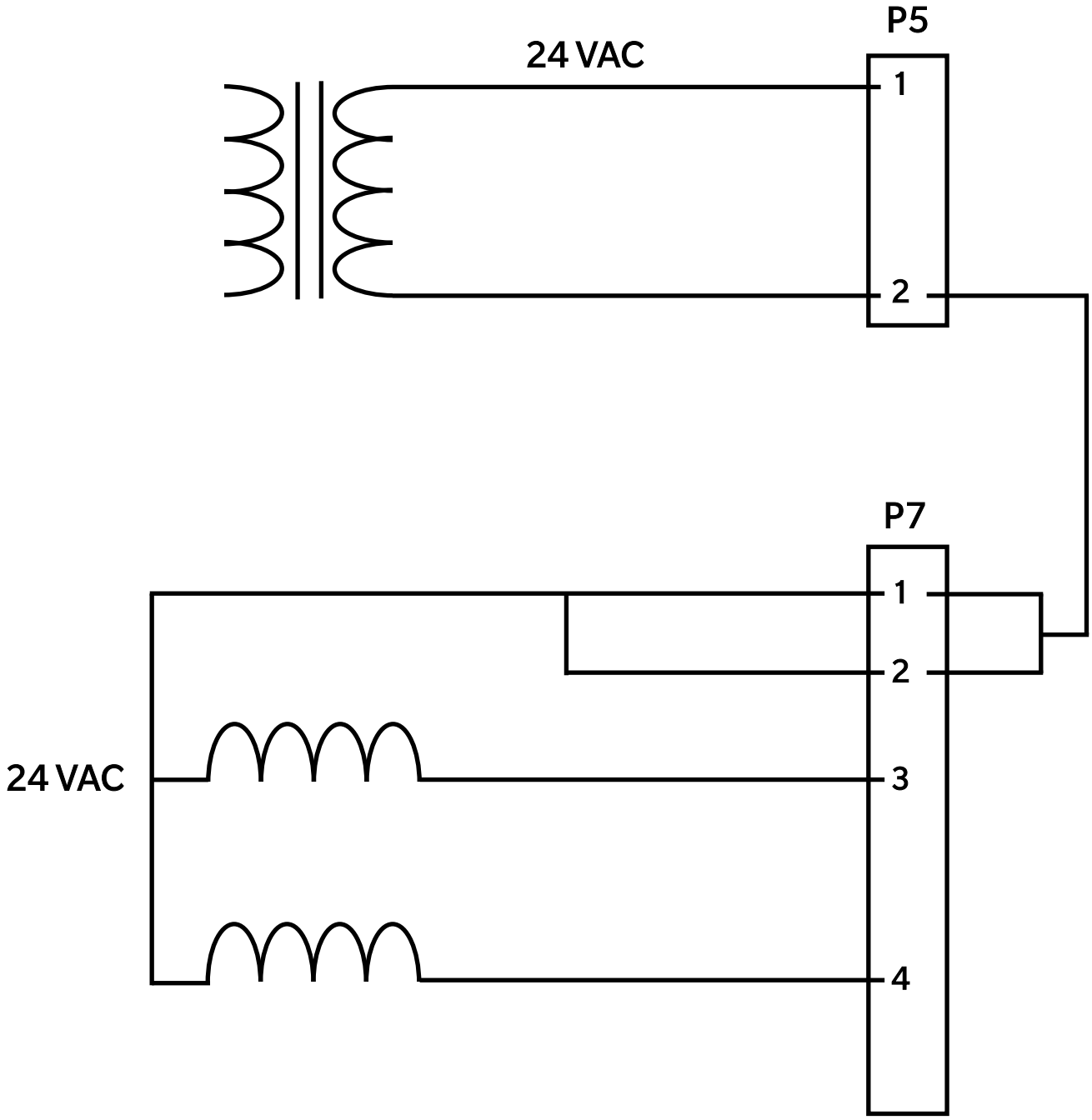

LENZE 440 VOLT VARIABLE FREQUENCY DRIVE

P6 PLUG

VFD CONNECTIONS & COLOURS	CIRCUIT BOARD CONNECTIONS
BLUE #13B	1
ORANGE #13A	2
BROWN #4	3
WHITE #2	6
BLACK #5	7
RED #6	8

ADD JUMPER BETWEEN #1 AND #4

PLEASE NOTE: PINS 4 & 5 ON THE CIRCUIT BOARD ARE NOT USED

VACON 110 & 220 VOLT VARIABLE FREQUENCY DRIVE
P6 PLUG

VFD CONNECTIONS & COLOURS	CIRCUIT BOARD CONNECTIONS
BLUE #9	1
ORANGE #8	2
BROWN #6	3
RED #3	6
BLACK #2	7
WHITE #1	8

PLEASE NOTE: PINS 4 & 5 ON THE CIRCUIT BOARD ARE NOT USED

AIR/OIL HYDRAULIC CYLINDER SOLENOIDS

P7 PLUG

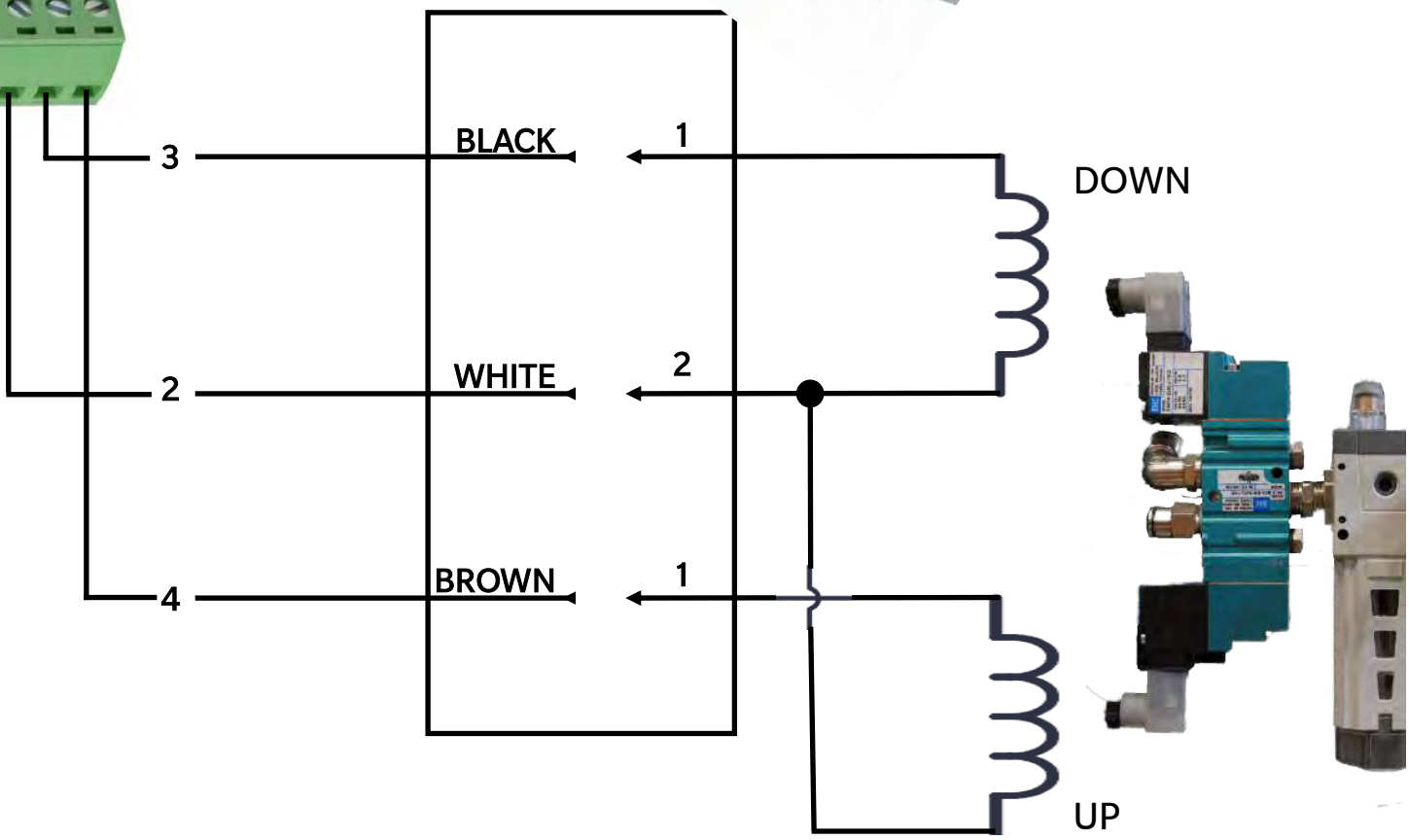

VARI-SPEED FOOT PEDAL

P8 PLUG

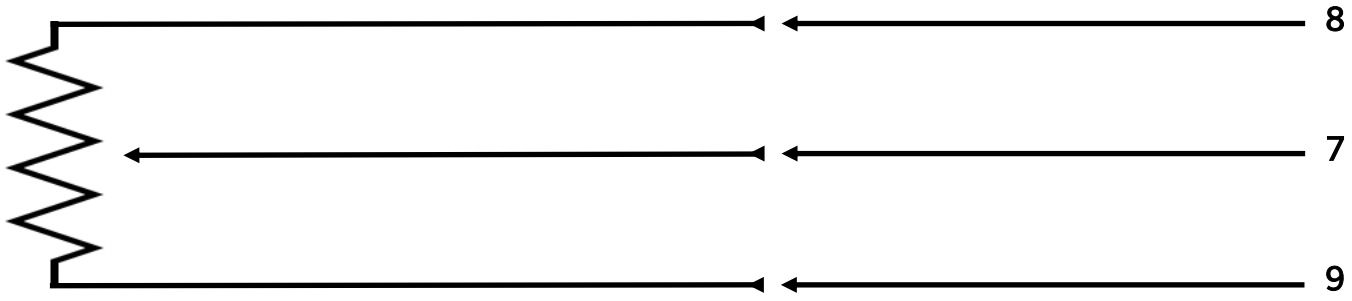

RED PLUG
REMOVE RED FILLER AND REPLACE WITH BLACK VENT CAP YOU WILL FIND STAPLED TO THIS PAGE. FAILURE TO DO SO WILL VOID WARRANTY.

Single Acting, Hollow Hole Cylinders Service Parts

MODELS: HC1202T

SFA Companies 10939 N. Pomona Ave. Kansas City, MO 64153
Tel: 888-332-6419 * Fax: 816-448-2142
E-mail: sales@bvahydraulics.com Website: www.bvahydraulics.com

Note: Not all components of the pump are replacement items, but are illustrated as a convenient reference of location and position in the assembly sequence.

Item	Part Number for Model: HC1202T	Description	Qty
1	N/A	Cylinder	1
2	N/A	Center Tube	1
3	N/A N/A	Plunger	1
4	*	Back-Up Ring	1
5	*	U-Cup	1
6	H32-6-1122-107	Bearing	1
7	*	O-Ring	1
8	*	Back-Up Ring	1
9	666-5-0300-107	C-Clip	1
11	H32-6-1121-105	Bearing	1
12	*	U-Cup	1
13	*	Back-Up Ring	1
14	*	O-Ring	1
15	512-2-0470-107	Comp. Spring	1
16	H32-6-2305-100	Protecting Cap	1
17	H32-6-1821-103	Upper Bearing	1
18	*	O-Ring	1
*	H32-3-9905-101	Repair Kit	1

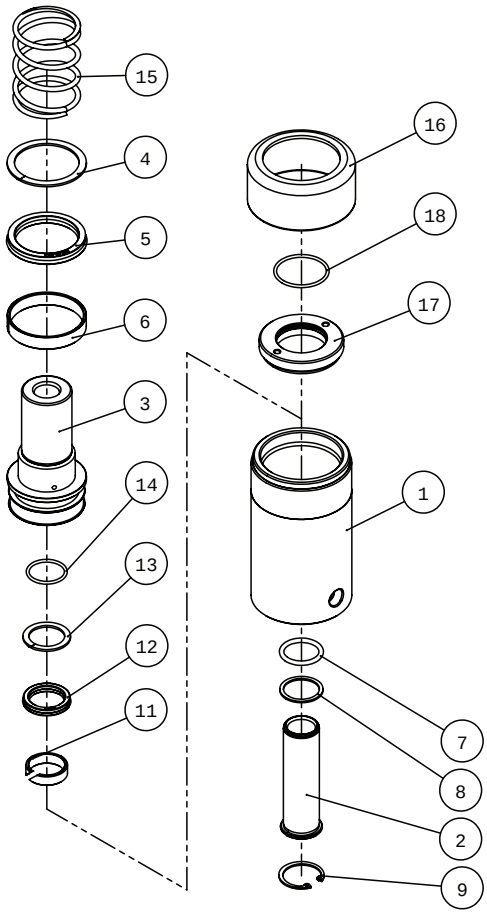

(*) - indicates items included in, and available only as part of Repair Kit
N/A - part is not available as replacement

Note: To ensure safe and reliable performance, replace worn or damaged parts with BVA Hydraulics Authorized Replacement Parts only.

⚠WARNING

Failure to comply with the following warnings may result in **personal injury** as well as **property damage**.

- Study, understand, and follow all instructions provided with and on this device before use.
- The user must be a qualified operator familiar with the correct operation, maintenance, and use of cylinders.

Wear protective gear when operating hydraulic equipment.

This device is **NOT** suitable for use as **support** device! As the load is lifted, use blocking and cribbing to guard against a falling load. Stay clear of a lifted load before it is properly supported. Never rely on hydraulic pressure to support a load.

Crush Hazard. Keep hands and feet away from cylinder and workpiece during operation.

- Do not exceed rated capacity of the cylinder or any equipment in the system. The cylinder is designed for a max. pressure of 10,000 psi.
- Do not connect a cylinder to a pump with higher pressure rating.
- Do not subject cylinder to a shock loads, a load dropped suddenly, causing the system pressure to exceed rated pressure.

The system operating pressure must not exceed the pressure rating of the lowest rated component the system. Install a pressure gauge or other load measuring instrument to monitor the operating pressure. Burst hazard exists if hose, connection or any other component in the system exceed its rated pressure.

Avoid damaging hydraulic hose. Do not allow hose to kink, twist, curl, crush, cut or bend so tightly that fluid flow within the hose is blocked or reduced. Periodically inspect the hose for wear.

Do not pull, position or move cylinder setup by the hose. Use carrying handle or other means of safe transport.

Do not handle pressurized hoses. Never attempt to grasp a leaking pressurized hose. Ensure to release the system pressure before disconnecting hydraulic hose or connections.

Hydraulic fluid can ignite and burn. Keep hydraulic equipment away from flames and heat. Excessive heat will soften seals, resulting in fluid leaks. Heat also weakens hose materials.

Cylinder must be on a stable base which is able to support the load while pushing or lifting. Use shims, friction material or constrains to prevent slippage of the base or load. Ensure cylinder is fully engaged into/onto adapters, extension accessories.

Center load on cylinder. Distribute load evenly across the entire saddle surface. Do not off-center loads on a cylinder. The load can tip or the cylinder can “kick out”.

Never try to disassemble a hydraulic cylinder, refer repairs to qualified, authorized personal. Contact BVA Hydraulics tech service for authorized service center.

Do not subject hose to sharp objects or heavy impact.

Hose material or seals must not come in contact with corrosive materials such as battery acid, creosote-impregnated objects and wet paint. Never paint a coupler or hose.

- No alteration shall be made to the cylinder.
- Use only factory authorized fasteners, accessories and hydraulic fluid.

INSTALLATION

NOTICE: *Use an approved, high-grade pipe sealant to seal all hydraulic connections.*

1. Remove the dust cover and rubber plug from coupler.
2. Inspect all threads and fittings for signs of wear or damage, and replace as needed. Clean all threads and fittings.
3. Connect hydraulic hose from hydraulic pump to the cylinder coupler. Ensure that there are no fluid leaks.
4. Install in-line pressure gauge.
5. Check for leaks in system and have repaired by qualified personnel.

NOTICE: *The use of cylinder attachments or extensions reduces the cylinder capacity by at least 50% per attachment/extension.*

⚠ **WARNING:** *Before operating the pump, tighten all hose connections with proper tools. Do not overtighten. Connections should only be tightened securely and leak-free. Overtightening can cause premature thread failure or high pressure fittings to burst.*

⚠ **WARNING:** *Before repairs are made, depressurize cylinder.*

<u>Tips for hydraulic hoses & fluid transmission lines:</u>

- Avoid short runs of straight line tubing. Straight line runs do not provide for expansion and contraction due to pressure and/or temperature changes.
- Reduce stress in tube lines. Long tubing runs should be supported by brackets or clips.

SPECIFICATIONS

Model Number	Cylinder Capacity (tons)	Stroke (in)	Cylinder Effective Area (in^2)	Internal Pressure at Capacity (psi)	Oil Capacity (in^3)	Collapsed Height (in)	Extended Height (in)	Weight (lbs)	Cylinder Housing Dia. (in)	Collar Thread	Mounting Hole Dia.
HC1202T	12	1.61	2.91	8,236	4.70	4.74	6.36	6.2	2.76	2¾"-16	2.00

OPERATION

Operate the hydraulic pump to advance and retract the cylinder. **Do not** continue pumping when cylinder is fully extended. Internal pressure will build up and may damage the seal of the cylinder.

WARNING: NEVER rely on hydraulic pressure alone to secure a load! **NEVER** allow personnel to work or pass under a load until the load is secured by cribbing, blocking, or other mechanical means.

WARNING: *To help prevent material fatigue if the cylinder is to be used in a continuous application, the load should not exceed 85% of the rated capacity.*

WARNING: *Your cylinder, hose(s), couplings and pump all must be rated for the same maximum operating pressure, correctly connected and compatible with the hydraulic fluid used. An improperly matched system can cause the system to fail.*

WARNING: *All personnel must be clear before lowering load.*

MAINTENANCE

1. Inspect hoses and connections daily. Replace damaged components immediately with BVA Hydraulics Replacement Parts only.
2. Tighten connections as needed. Use pipe thread sealing compound when servicing connections.
3. Always use clean, approved hydraulic fluid and change as recommended or sooner if the fluid becomes contaminated (never exceed 400 hours). Follow pump manufacturers instructions for changing and adding hydraulic fluid. Use only good quality hydraulic fluid. We recommend BVA FJZ01 or equivalent when using with hand pump, air pump, or electric pump. **Never** use brake fluid, transmission fluid, turbine oil, motor oil, alcohol, glycerin etc. Use of other than good quality hydraulic oil will void warranty and damage the cylinder, pump, hose etc.
4. Use an approved, high-grade pipe thread sealant to seal all hydraulic connections. Teflon tape can be used if only one layer of tape is used and it is applied carefully (two threads back) to prevent the tape from being introduced into hydraulic system. A piece of tape could travel through the system and obstruct the flow of fluid and adversely affect function.

Lubrication & Cleaning

Keep cylinder clean at all times.

1. Any exposed threads (male or female) must be cleaned and lubricated regularly, and protected from damage. Lubricate with light machine oil.
2. If a cylinder or ram has been exposed to rain, snow, sand, airborne abrasive, or any corrosive environment, it must be cleaned, lubricated, and protected immediately after exposure. Daily clean exposed ram with clean cloth dampened with light machine oil. Protect exposed ram from the elements at all times.
3. Keep the hydraulic system as free of dirt as possible. When not in use, couplers must be sealed with dust covers. All hose connections must be free of dirt and grime. Any equipment attached to the cylinder must be kept clean.

Storage

Cylinders should be stored vertically with ram plunger fully retracted in a dry, protected area, not exposed to corrosive vapor, dust or other harmful elements. When a cylinder has not been used for a period of 4 months, it should be connected to a pump and fully extended and then retracted a minimum of 5 times. This cycle will lubricate the cylinder wall, reducing the possibility of corrosion and damage thereof.

How to remove faulty coupler:

If cylinder does not retract,

1. Secure load by other means.
2. Depressurize pump and hose.
3. Remove the cylinder from application.
4. Disconnect and replace with new coupler.

MAINTENANCE (cont.)

NOTICE: *Do not attempt to grasp with pliers or wrench without first wrapping the jaws of such tool with rags or similar padding.*

How to bleed air from system:

1. Place pump at a higher elevation than the hose and cylinder as shown in Figure 2.
2. Operate pump to fully extend and retract the cylinder 2 or 3 times. The objective is to force the air bubbles up hill and back to the pump reservoir.
3. Follow pump instruction manual to bleed the air from pump reservoir. On most pumps, air can escape by opening the oil filler plug/screw.

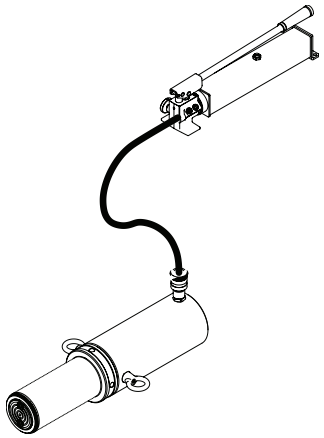

Figure 2 - Illustration to bleed air from system

TROUBLESHOOTING GUIDE

The following information is intended as an aid in determining if problem exists. Cylinders should be repaired only by authorized BVA Service Center. For repair service, contact service center in your area.

Symptom	Possible Causes	Corrective Action
Erratic action	• Air in system or pump cavitation. • External leakage in cylinder. • Cylinder sticking or binding.	• Vent the system (refer to figure 2). • Contact service center. • Contact service center.
Cylinder will not extend, or respond to pressurized fluid	• Overload condition. • Loose couplers. • Faulty couplers. • Improper valve position. • Oil level in pump is low. • Pump not operating. • Air-locked pump.	• Remedy overload condition. • Tighten couplers. • Replace both female and male couplers. • Close release valve or change valve position. • Fill and bleed the system. • Check pump's operating instructions. • Prime pump per pump operating instructions.
Cylinder extend only partially	• Oil level in pump is low. • Overload condition. • Cylinder is sticking or binding.	• Fill and bleed the system. • Remedy overload condition. • Contact service center.
Cylinder move slower than normal	• Loose connection or coupler. • Restricted hydraulic line or fitting. • Pump not working correctly. • Cylinder seals leaking.	• Tighten connection or coupler. • Clean and replace if damaged. • Check pump's operating instructions. • Contact service center.
Cylinder responds to pressurized fluid, but system does not maintain pressure	• Overload condition. • Pump or valve malfunctioning. • Cylinder seals leaking.	• Remedy overload condition. • Check pump's operating instructions. • Contact service center.
Oil leaking from cylinder	• Worn or damaged seals.	• Contact service center.
Cylinder will not retract or retracts slower than normal	• Improper valve position. • Malfunctioning coupler, damaged application. • Pump reservoir overfilled. • Cylinder damage internally.	• Open release valve or change valve position. • **Secure load by other means**. **Depressurize** pump and hoses, remove application and replace coupler. • **Secure load by other means**. **Depressurize** pump and hoses, remove application, then drain fluid to proper level. • Contact service center.
Cylinder performs poorly	• Oil level in pump is low. • Air trapped in system.	• Ensure proper oil level. • Vent the system (refer to figure 2).

LIMITED LIFETIME WARRANTY

BVA Hydraulics®, represented in the United States by SFA Companies ["SFA"] warrants this product to be free from defects in material and workmanship for the life of the product as long as the original purchaser owns the product. The warranty is non-transferable and is subject to the terms, exclusions, and limitations described below:

- Damaged components, including but not limited to bent rams, dented or crushed cylinder walls, broken welds or couplers as well as worn out seals, o-rings and springs are the result of misuse and not covered by warranty and BVA Hydraulics will not provide any warranty credit for such damaged components.
- This warranty does not cover ordinary wear and tear, overloading, alterations (including repairs or attempted repairs not performed by BVA Hydraulics or one of its authorized personnel), improper fluid use, or use of the product in any manner for which the product was not intended or the use of which is not in accordance with the instructions or warnings provided with the product.
- In the unlikely event that a BVA Hydraulics product fails due to material defect in workmanship, you may contact SFA for disposition. In such cases, the customer's sole and exclusive remedy for any breach or alleged breach of warranty is limited to the repair or replacement of the defective product.
- Under no circumstances is BVA Hydraulics liable for any consequential or incidental damage or loss whatsoever.
- THIS WARRANTY IS LIMITED TO NEW PRODUCTS SOLD THROUGH AUTHORIZED DISTRIBUTORS AND OTHER CHANNELS DESIGNATED BY BVA HYDRAULICS. NO AGENT, EMPLOYEE OR OTHER REPRESENTATIVE OF BVA HYDRAULICS IS AUTHORIZED TO MODIFY THIS WARRANTY.
- THE FOREGOING IS EXCLUSIVE AND IS IN LIEU OF ALL OTHER EXPRESS AND IMPLIED WARRANTIES, INCLUDING BUT NOT LIMITED TO THE IMPLIED WARRANTIES OF MERCHANTABILITY AND FOR A FITNESS FOR A PARTICULAR PURPOSE.
- Components not manufactured by BVA Hydraulics including certain motor systems, gasoline engines, and other are not covered by this warranty and instead are covered by the manufacturer's separate manufacturer's warranty provided in the package.
- BVA Hydraulics' liability in all cases is limited to, and will not exceed the purchase price paid for the product.

SFA Companies
10939 N. Pomona Ave. Kansas City, MO 64153
Tel: 888-332-6419
E-mail: sales@bvahydraulics.com

Air Hydraulic Pumps Instruction Manual

MODELS: PA600, PA600H, PA1500, PA1500A, PA1500B, PA2000 & PA3801

SFA Companies 10939 N. Pomona Ave. Kansas City, MO 64153
Tel: 888-332-6419 * Fax: 816-448-2142
E-mail: sales@bvahydraulics.com Website: www.bvahydraulics.com

Maximum Operating Pressure 10,000 PSI

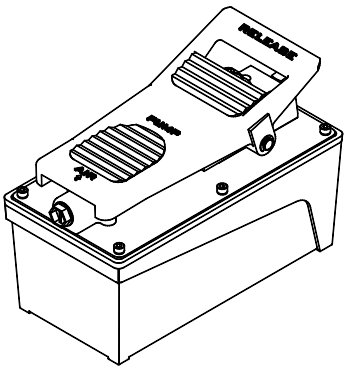

PA1500, PA1500A
& PA1500B

This is the safety alert symbol. It is used to alert you to potential personal injury hazards. Obey all safety messages that follow this symbol to avoid possible injury or death.

Printed in Taiwan

SAFETY AND GENERAL INFORMATION

Save these instructions. For your safety, read and understand the information contained within. The owner and operator shall have an understanding of this product and safe operating procedures before attempting to use this product. Instructions and safety information shall be conveyed in the operator's native language before use of this product is authorized. Make certain that the operator thoroughly understands the inherent dangers associated with the use and misuse of the product. If any doubt exists as to the safe and proper use of this product as outlined in this factory authorized manual, remove from service immediately.

Inspect before each use. It is recommended that, prior to each use, an inspection be done by qualified personnel and that any missing or damaged parts, decals, warning/ safety labels or signs be replaced with BVA Hydraulics authorized replacement parts only. Any pump that appears to be damaged in any way, is worn, leaking or operates abnormally shall be removed from service immediately until such time as repairs can be made. Any pump that has been or suspected to have been subject to a shock load (a load dropped suddenly, causing the system pressure to exceed 10,000 PSI), shall be removed from service immediately until checked out by a BVA Hydraulics authorized service center. Owners and operators of this equipment shall be aware that the use and subsequent repair of this equipment may require special training and knowledge.

PRODUCT DESCRIPTION

BVA Hydraulics Air Hydraulic Pumps are engineered to meet most Industrial Standards for Performance and Safety. Its unique hydraulic circuit allows quick displacement of hydraulic fluid under no load conditions and easy pumping in loaded conditions. These air actuated pumps supply compressed hydraulic fluid to compatible applications i.e. rams, presses, spreaders, compactors and crimping machines, anywhere that 10,000 PSI of fluid pressure is needed. Special skill, knowledge and training may be required for a specific task and the product may not be suitable for all the jobs described above. Unsuitable applications would include applications that call for a device to move, level or support persons, animals, hazardous materials, mobile homes/ dwellings in general, mirrors and/or plate glass, and/or to connect/secure hatches, components, etc. between bulkheads. The user must ultimately make the decision regarding suitability of the product for any given task and assume the responsibility of safety for himself or herself and others in the work area.

WARNING: *To reduce the risk of personal injury and/ or property damage, ensure that the rated working pressure of each pressurized attachment be equal to or greater than the rated working pressure developed by the hydraulic pump.*

WARNING: *Always check connections before using. Alteration of these products is strictly prohibited. Use only those adapters and attachments provided and approved by the manufacturer.*

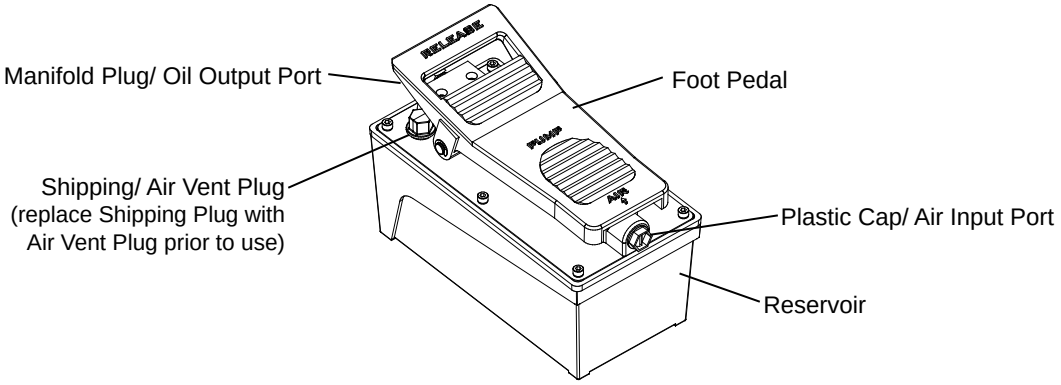

Figure 3 - Models PA1500, PA1500B Components (PA1500 shown) 2

⚠ WARNING

- Study, understand, and follow all instructions provided with and on this device before use.
- No alteration shall be made to this device.
- Always wear protective gear when operating hydraulic equipment.
- Keep hydraulic equipment away from flames and heat. Hydraulic fluid can ignite and burn. Do not operate if leaks are detected.
- Crush Hazard. Keep hands and feet away from loading area. Avoid pinch points or crush points that can be created by the load, cylinder, or any equipment of system.
- To avoid crushing and related injuries: NEVER work on, under or around a lifted load before it is properly supported by appropriate means. Never rely on hydraulic pressure alone to support load.

HYDRAULIC PUMPS

- The user must be a qualified operator familiar with the correct operation, maintenance, and use of pumps. Lack of knowledge in any of these areas can lead to personal injury.
- Do not exceed rated capacity of the pump or any equipment in the system.
- Never attempt to lift a load weighing more than the capacity of the cylinder.
- Burst hazard exists if hose or connection pressure exceeds rated pressure.
- Inspect pump, cylinder, hoses and connections before each use to prevent unsafe conditions from developing. Do not use if damaged, altered or in poor condition. Do not operate system with bent or damaged coupler or damaged threads.
- Never hold or stand directly in line with any hydraulic connections while pressurizing.
- Use gauge or other load measuring instrument to verify load.
- Never attempt to disconnect hydraulic connections under pressure. Release all line pressure before disconnecting hoses.
- Do not subject the pump and its components to shock loads.
- Use only approved accessories and approved hydraulic fluid.
- Never attach ANY component not authorized by manufacturer.
- Always ensure that the chosen application is stable to work on and around.
- Do not connect to application which can return more oil to the reservoir than the pump reservoir can hold.
- Do not connect pump to hydraulic system powered by another pump.
- This device is not suitable for use as support device! As the system load is lifted, use blocking and cribbing to guard against a falling load.
- Clear all personnel before lowering load or depressurizing the system.
- Do not disassemble hydraulic cylinder, refer repairs to qualified, authorized personnel.

HYDRAULIC HOSES & FLUID TRANSMISSION LINES

- Avoid short runs of straight line tubing. Straight line runs do not provide for expansion and contraction due to pressure and/or temperature changes.
- Reduce stress in tube lines. Long tubing runs should be supported by brackets or clips. Before operating the pump, tighten all hose connections with proper tools. Do not overtighten. Connections should only be tightened securely and leak-free. Overtightening can cause premature thread failure or high pressure fittings to burst.
- Should a hydraulic hose ever rupture, burst or need to be disconnected, immediately shut off the pump and release all pressure. Never attempt to grasp a leaking pressurized hose with your hands. The force of escaping hydraulic fluid can inflict injury.
- Do not subject the hose to potential hazard such as fire, sharp objects, extreme heat or cold, or heavy impact.
- Do not allow the hose to kink, twist, curl, crush, cut or bend so tightly that the fluid flow within the hose is blocked or reduced. Periodically inspect the hose for wear.
- Do not pull, position or move setup by the hose.
- Hose material and coupler seals must be compatible with hydraulic fluid used. Hoses also must not come in contact with corrosive materials such as battery acid, creosote-impregnated objects and wet paint. Never paint a coupler or hose.
- FAILURE TO HEED THESE WARNINGS MAY RESULT IN PERSONAL INJURY AS WELL AS PROPERTY DAMAGE.

SPECIFICATIONS

Model Number	Usable Oil Capacity (in^3)	Rated Pressure (psi)	Output Flow Rate (in^3/min)		Input Air Pressure (psi)	Output Port Thread (Oil)	Input Port Threads (Air)	Weight (lbs w/ fluid)
			No Load	Load				
PA1500	91.5	10,000	66	11	110 - 175	3/8” -18NPTF	1/4” - 18NPT	18.1
PA1500A	91.5		61	11				18.7

BEFORE USE AND SET UP

1. Familiarize yourself with the specifications and illustrations in this owners manual. Know your pump, its limitations and how it operates before attempting to use. Refer to specification chart on page 3 for details of oil port thread size, usable oil capacity, and more. If in doubt, contact BVA Hydraulics Technical Service (888) 332-6419.

2. **For models PA1500, PA1500A, PA1500B:** Replace shipping plug (red color) with air vent plug (black color) before use.

3. **Air Connection:** Remove plastic cap, connect suitable air supply to air input port. Air input port is designed to fit the popular 1/4" NPT air nipple (not included). Ensure that your air source can dedicate 7.8CFM @ 110~175 PSI to each pump operated.

4. **Hydraulic Connection:** Clean all areas around the oil port of pump and cylinder. Inspect all threads and fitting for signs of wear or damage and replace as needed. Clean all hose ends, couplers and union ends. Remove the manifold plug, then connect oil output port to suitable fittings and application/cylinder.

NOTICE: *Always secure threaded port connections with high grade, non-hardening pipe thread sealant. Teflon tape can be used if only one layer of tape is used and it is applied carefully, two threads back, to prevent the tape from being introduced into hydraulic system, which could cause jamming of precision-fit parts.*

WARNING: *To reduce the risk of personal injury and/ or property damage, Hydraulic connections must be securely fastened before building pressure in the system. Release all system pressure before loosening any hydraulic connection in the system.*

OPERATION

WARNING: *Always monitor pressure, load or position using suitable equipment. Pressure may be monitored by means of an optional manifold and gauge. Load may be monitored by means of a load cell and digital indicator. Correct application position can only be determined by the operator of the equipment.*

For Model PA600H: (Hand Button Pump)
1. To extend the cylinder:
   a. Close release valve by turning it clockwise firmly.
   b. Depress the hand button on top of the air input port until desired pressure, load or position is reached.
2. To hold the cylinder in position, simply release the hand button to deactivate the pump.
3. To retract cylinder, open release valve by turning it counter-clockwise slowly.

For Model PA1500A:
1. Install in-line pressure gauge between air pump and cylinder.
2. Loosen External Pressure Relief Adjustment Screw fully.
3. Begin pumping air while monitoring pressure gauge. Tighten Adjustment Screw (approximately 1/4 turn increments) until gauge reaches desired working pressure.

a. Rotate clockwise to increase

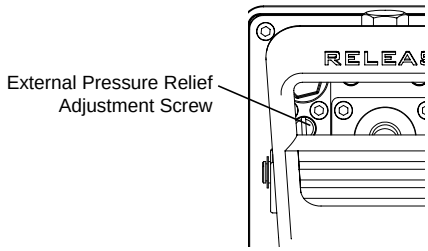

NOTICE: *Never operate a pump which is disconnected from application. If operate in this condition, the hose and connections will become pressurized. This increases burst hazard. Damage may occur to pump and its components.*

MAINTENANCE

NOTICE: *Use only good quality hydraulic fluid. Never use brake fluid, transmission fluid, turbine oil, motor oil, alcohol, glycerin etc. Use of other than good quality hydraulic oil will void warranty and damage the pump, hose, and application. Premium quality hydraulic jack fluid is recommended.*

1. Inspect hoses and connections daily. Replace damaged components immediately.
2. Tighten connections as needed. Use non-hardening pipe thread compound when servicing connections.

Adding Hydraulic Fluid

1. Depressurize and disconnect hydraulic hose from application/ cylinder.
   a. For Model PA1500, PA1500A&B: With pump in its upright, horizontal position, remove the air vent plug located on the top plate of the reservoir.
2. Use a small funnel to fill the oil to within 3/4" (19mm) of the opening.
3. Wipe up any spilled fluid and reinstall the air vent plug/ reservoir cap.

Changing Hydraulic Fluid

1. For best results, change fluid once a year or every 300 hours of use.
2. Repeat # 2 above, then pour used fluid into a sealable container.
3. Dispose of fluid in accordance with local regulations.
4. Fill with a good quality hydraulic fluid as recommended above. Reinstall air vent plug/ reservoir cap. **Lubrication**

When pump is operated on daily basis, the manufacturer recommends installing an inline oiler and air dryer. Use SAE grade oil (5W to 30W).

Storage

1. When not in use, depressurize and disconnect hydraulic pump from application.
2. Wipe clean, thoroughly and store in clean, dry environment. Avoid temperature extremes.
3. For transportation or long storage, replace the air vent plug with shipping plug (for model PA1500, PA1500B, PA2000 & PA3801).

TROUBLESHOOTING GUIDE

The following information is intended as an aid in determining if problem exists. Pumps should be repaired only by authorized BVA Service Center. For repair service, contact service center in your area.

Symptom	Possible Causes	Corrective Action
Application does not extend, move or respond to pressurized fluid	• Overload condition • Loose couplers • Faulty couplers • Pump malfunction • Inadequate air supply	• Remedy overload condition • Tighten couplers • Replace couplers • Contact service center • Ensure air source can dedicate 7.8 CFM @ 110~175 PSI
Application responds to pressurized fluid, but system does not maintain pressure	• Overload condition • Pump or valve malfunction • Application/connection leaking	• Remedy overload condition • Contact Service Center • Replace application/connection
Application responds slower than normal	• Loose connection or coupler • Restricted hydraulic line or fitting • Application/connection leaking	• Tighten connection or coupler • Clean and replace if damaged • Replace application/connection
Application does not return fluid to pump (i.e. cylinder will not retract)	• Malfunctioning coupler, damaged application	• Secure load by other means. Depressurize pump and hose, remove coupler and/or application, then renew or replace
Application does not fully extend (cylinder or spreader)	• Reservoir overfilled • Fluid level in pump is low	• Secure load by other means. Depressurize pump and hose, remove application, then drain fluid to proper level • Secure load by other means. Depressurize pump and hose, remove application, then fill fluid to proper level
Poor performance	• Fluid level in pump is low	• Ensure proper fluid level

Air Hydraulic Pump Service Parts

MODEL: PA1500, PA1500A & PA1500B

SFA Companies 10939 N. Pomona Ave. Kansas City, MO 64153
Tel: 888-332-6419 * Fax: 816-448-2142
E-mail: sales@bvahydraulics.com Website: www.bvahydraulics.com

Note: Not all components of the pump are replacement items, but are illustrated as a convenient reference of location and position in the assembly sequence.

Parts Illustration

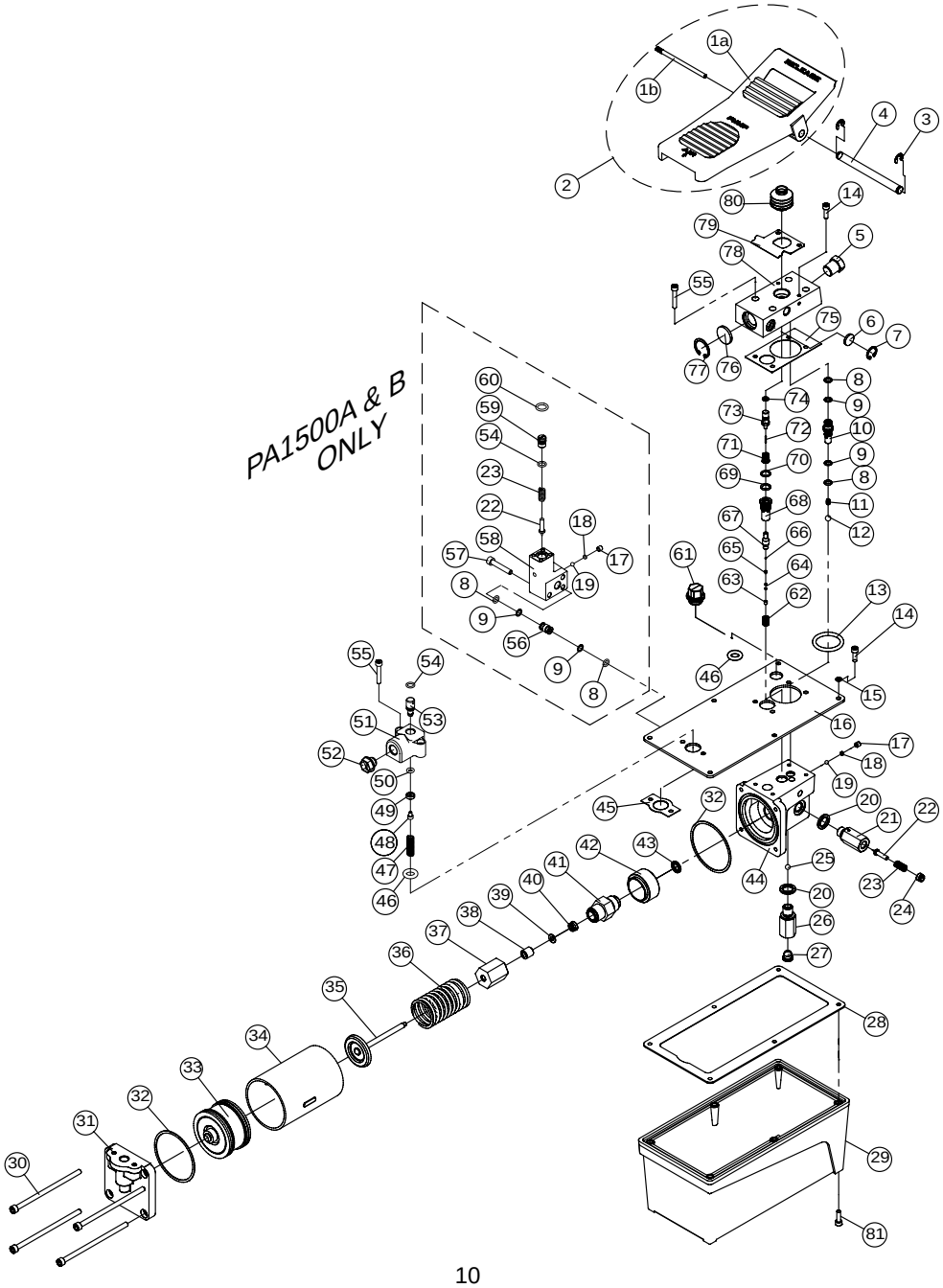

Air Hydraulic Pump Service Parts

MODEL: PA1500, PA1500A & PA1500B

Parts List

Item	Part#	Description	Qty
1a	A57-6-6003-102	Foot Pedal	1
1b	A57-6-6001-108	Steel Bar	1
2	A57-4-6003-100	Foot Pedal w/ Steel Bar	-
3	* **	Pedal Axle E-clip	2
4	A57-6-2003-102	Pedal Axle	1
5	D05-6-1001-106	Manifold Plug (oil output port)	1
6	A57-6-3007-105	Noise Suppressor	1
7	666-5-0160-107	C-clip	1
8	* **	O-ring	2/4
9	* **	Back-up Ring	2/4
10	A57-6-4002-201	Oil Discharge Valve	1
11	512-2-0043-108	Compression spring	1
12	601-7-0009-001	Steel Ball	1
13	511-7-0410-102	O-ring	1
14	649-1-0050-055	Allen Screw (M5x0.8x15L)	8/12
15	* **	Copper Washer	6/10
16	A57-6-1603-202	Reservoir Cover	1
	A57-6-6013-105	Reservoir Cover (PA1500A)	
17	644-1-0060-05311	Set Screw	1/2
18	503-9-0050-106	Steel Ball Seat	1/2
19	601-7-0006-005	Steel Ball	1/2
20	*	Crush Washer	2
21	A59-6-1017-102	Pressure Relief Vlv Cylinder	1
22	A17-6-1216-102	Pressure Relief Vlv Stem	1/2
23	512-2-0067-010	Compression Spring	1/2
24	A17-5-1603-300	Pressure Relief Vlv Screw	1
25	601-7-0008-009	Steel Ball	1
26	A59-6-1015-108	Oil Intake Valve	1
27	520-8-0134-101	Filter	1
28	* **	Gasket	1
29	A57-6-1601-107	Oil Reservoir	1
30	649-1-0060-122	Thru Bolt, Air Motor	4
31	A57-6-1002-105	End Plate, Air Motor	1
32	A17-6-2105-108**	Gasket	2
33	A17-4-2100-500	Air Motor Piston	1
34	A57-6-1003-107	Cylinder, Air Motor Piston	1
35	A57-3-1011-108	Pump Piston	1
36	512-2-0410-017	Compression Spring	1
37	A57-6-1014-102	Pump Piston Guide	1
38	A57-6-2023-108	Bushing	1
39	573-7-0120-105**	Back-up Ring	1

Qty - PA1500, PA1500B/PA1500A
(*) indicated items included in, and available only as part of PA1500/PA1500B Seal Kit
(**) Indicated items included in PA1500A Seal Kit

Item	Part#	Description	Qty
40	*	U-cup	1
41	A59-6-1013-105	Pump Piston Cylinder	1
42	A57-6-1016-106	Spacer	1
43	H18-6-8103-104	Crush Washer	1
44	A57-6-1001-204	Base, Hyd Unit	1
	A57-6-6012-103	Base, Hyd Unit (PA1500A)	
45	A57-6-1605-105**	Gasket	1
46	511-7-0140-200	O-ring	2
47	512-2-0092-101	Compression Spring	1
48	649-1-0040-007	Allen Screw (M4x0.7x0.6L)	1
49	A57-6-5004-109	Air Intake Cap	1
50	511-7-0053-104**	O-ring	1
51	A57-6-5001-103	Air Manifold	1
52	A17-6-1105-103	Plastic Cap (air)	1
53	A57-6-5003-107	Air Intake Valve	1
54	511-7-0080-309**	O-ring	1/2
55	649-1-0050-046	Allen Screw (M5x0.8x30L)	6
56	H53-6-1810-101	Oil Outlet Tube	1
57	649-1-0060-609	Screw	3
58	A57-6-6011-101	Pressure Adjusting Base	1
59	A17-6-2601-100	Pressure Adjusting Nut	1
60	511-7-0120-406**	O-ring	1
61a	A57-3-5007-107	Shipping Plug (red)	1
61b	A57-3-1900-109	Air Vent Plug (black)	1
62	512-2-0061-100	Compression Spring	1
63	644-1-0040-204	Lower Assy Bolt	1
64	*	Compression Spring	1
65	503-9-0035-100	Steel Ball Seat	1
66	601-7-0003-009	Steel Ball	1
67	A57-6-3003-305	Release Valve	1
68	A57-6-3004-307	Release Valve Guide	1
69	* **	O-ring	1
70	* **	Back-up Ring	1
71	552-2-0010-105	Compression Spring	1
72	*	Release Valve Pin	1
73	A57-6-3001-112	Release Valve Cap	1
74	* **	O-ring	1
75	* **	Gasket	1
76	A17-6-1002-103	Noise Suppressor	1
77	666-5-0250-108	C-clip	1
78	A57-6-6004-104	Oil Manifold	1
79	A57-6-5101-107	Detent Spring	1
80	A57-6-6005-106	Dust Cap	1
81	649-1-0063-605	Bolt (PA1500B)	4
*	A57-3-9901-101	Repair Kit	-
**	A57-3-9932-102	Repair Kit (PA1500A)	-

LIFETIME LIMITED WARRANTY

BVA Hydraulics®, represented in the United States by SFA Companies ["SFA"] warrants this product to be free from defects in material and workmanship for the life of the product as long as the original purchaser owns the product. The warranty is non-transferable and is subject to the terms, exclusions, and limitations described below:

- Damaged components, including but not limited to bent rams, dented or crushed cylinder walls, broken welds or couplers as well as worn out seals, o-rings and springs are the result of misuse and not covered by warranty and BVA Hydraulics will not provide any warranty credit for such damaged components.
- This warranty does not cover ordinary wear and tear, overloading, alterations (including repairs or attempted repairs not performed by BVA Hydraulics or one of its authorized personnel), improper fluid use, or use of the product in any manner for which the product was not intended or the use of which is not in accordance with the instructions or warnings provided with the product.
- In the unlikely event that a BVA Hydraulics product fails due to material defect in workmanship, you may contact SFA for disposition. In such cases, the customer's sole and exclusive remedy for any breach or alleged breach of warranty is limited to the repair or replacement of the defective product.
- Under no circumstances is BVA Hydraulics liable for any consequential or incidental damage or loss whatsoever.
- THIS WARRANTY IS LIMITED TO NEW PRODUCTS SOLD THROUGH AUTHORIZED DISTRIBUTORS AND OTHER CHANNELS DESIGNATED BY BVA HYDRAULICS. NO AGENT, EMPLOYEE OR OTHER REPRESENTATIVE OF BVA HYDRAULICS IS AUTHORIZED TO MODIFY THIS WARRANTY.
- THE FOREGOING IS EXCLUSIVE AND IS IN LIEU OF ALL OTHER EXPRESS AND IMPLIED WARRANTIES, INCLUDING BUT NOT LIMITED TO THE IMPLIED WARRANTIES OF MERCHANTABILITY AND FOR A FITNESS FOR A PARTICULAR PURPOSE.
- Components not manufactured by BVA Hydraulics including certain motor systems, gasoline engines, and others are not covered by this warranty and instead are covered by the manufacturer's separate manufacturer's warranty provided in the package.
- BVA Hydraulics' liability in all cases is limited to, and will not exceed the purchase price paid for the product.

SFA Companies
10939 N. Pomona Ave. Kansas City, MO 64153
Tel: 888-332-6419
E-mail: sales@bvahydraulics.com